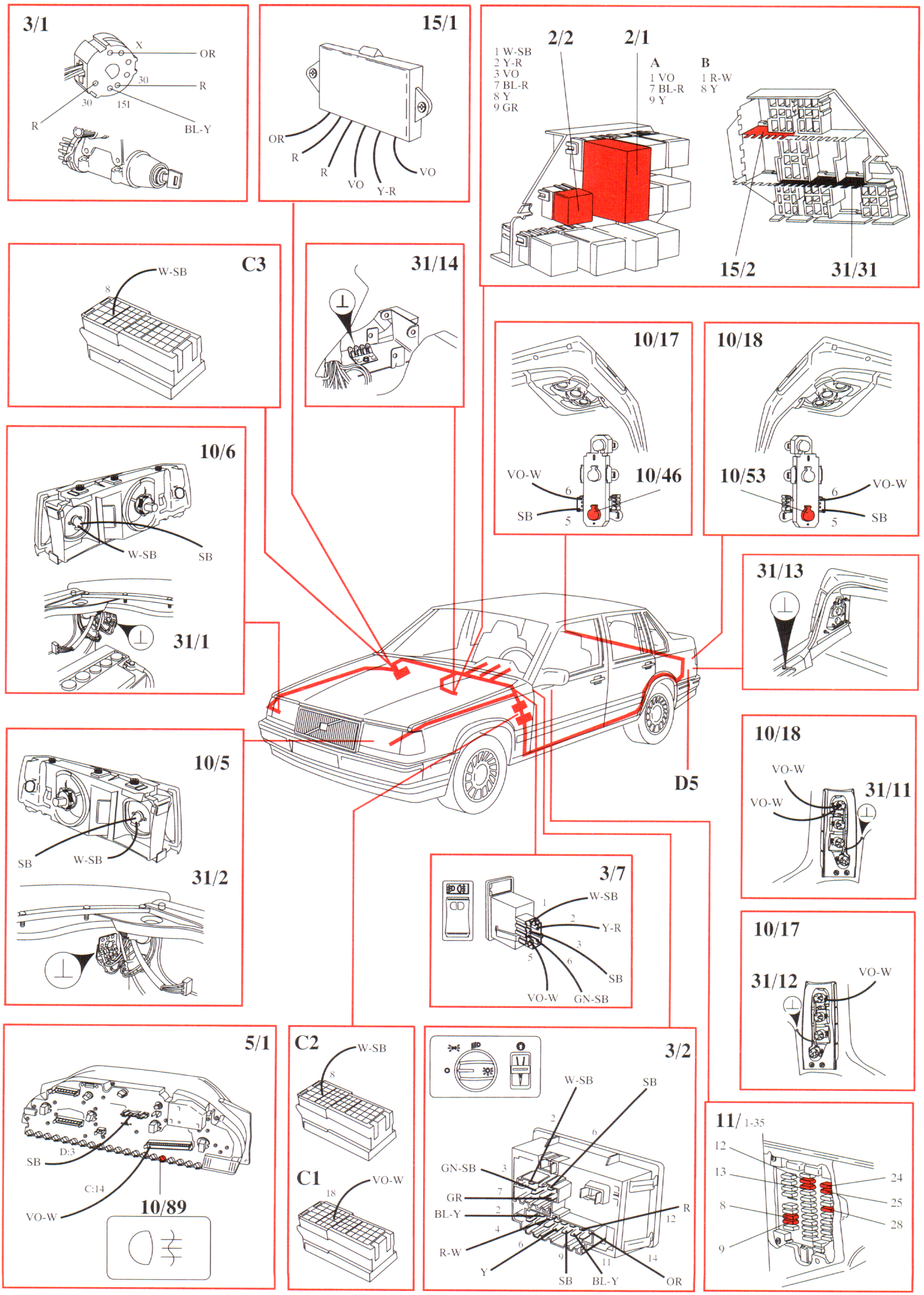
3/1
X
OR
30
R
30
151
R
BL-Y
15/1
OR
R
R
VO
Y-R
VO
2/2
2/1
1 W-SB
2 Y-R
3 VO
7 BL-R
8 Y
9 GR
A
1 VO
7 BL-R
9 Y
B
1 R-W
8 Y
15/2
31/31
C3
W-SB
8
31/14
10/17
VO-W
6
SB
5
10/46
10/18
10/53
VO-W
6
5
SB
10/6
W-SB
SB
31/1
31/13
D5
10/18
VO-W
VO-W
31/11
10/5
SB
W-SB
31/2
3/7
W-SB
1
2
Y-R
3
5
6
SB
VO-W
GN-SB
10/17
31/12
VO-W
5/1
D:3
SB
C:14
VO-W
10/89
C2
W-SB
8
C1
VO-W
18
3/2
W-SB
SB
2
6
GN-SB
3
GR
7
BL-Y
2
4
R-W
6
Y
9
SB
11
BL-Y
14
OR
12
R
11/ 1-35
12
13
8
9
24
25
28