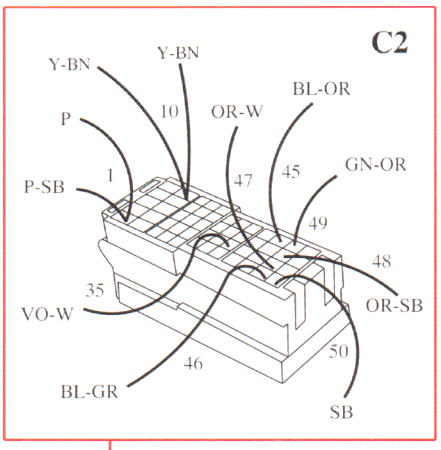
C2
Y-BN
Y-BN
P
10
OR-W
BL-OR
P-SB
1
47
45
GN-OR
49
48
35
VO-W
OR-SB
46
50
BL-GR
SB

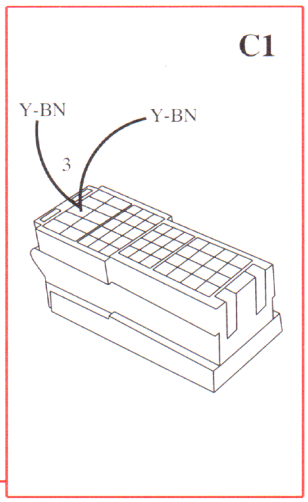
C1
Y-BN
Y-BN
3

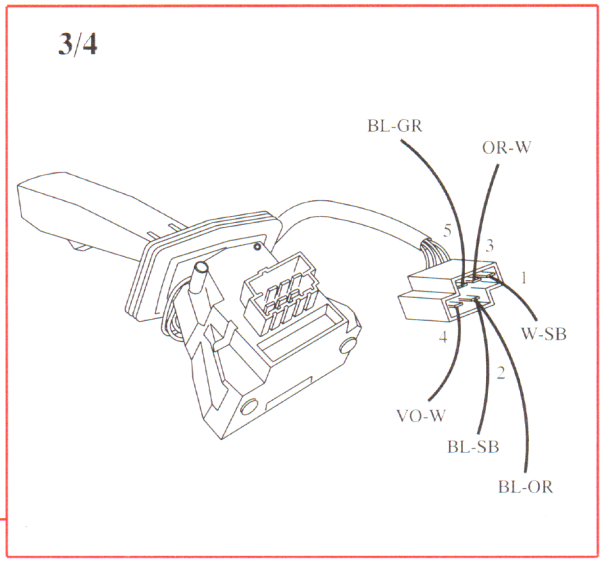
3/4
BL-GR
OR-W
5
3
1
W-SB
4
2
VO-W
BL-SB
BL-OR

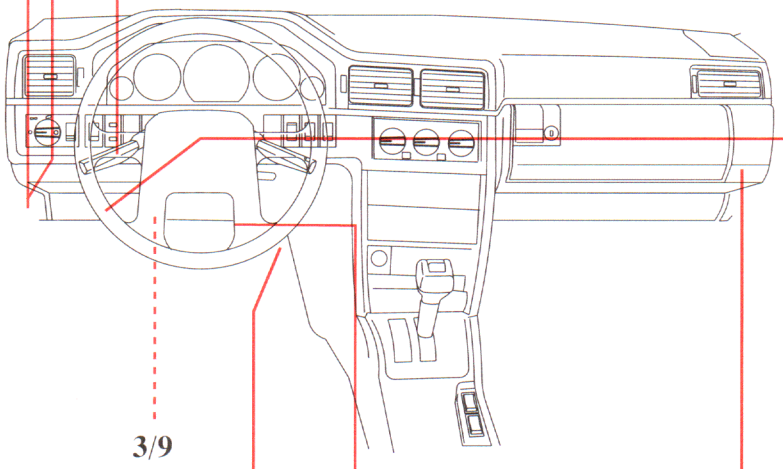
3/9

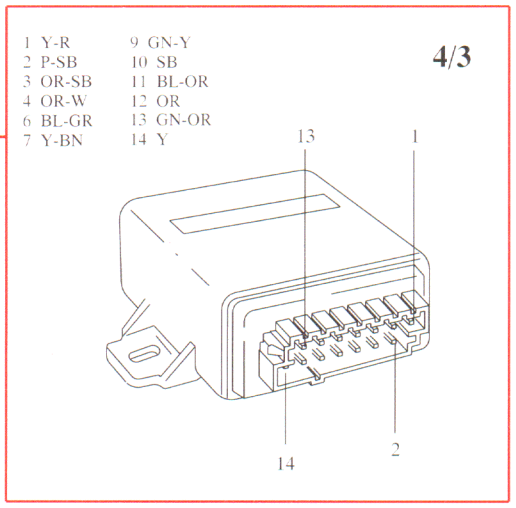
1 Y-R
2 P-SB
3 OR-SB
4 OR-W
6 BL-GR
7 Y-BN
9 GN-Y
10 SB
11 BL-OR
12 OR
13 GN-OR
14 Y
4/3
13
1
14
2

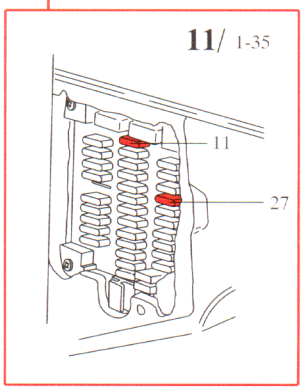
11/ 1-35
11
27

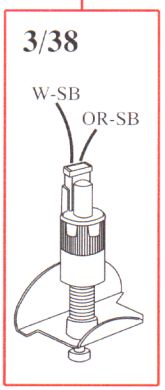
3/38
W-SB
OR-SB

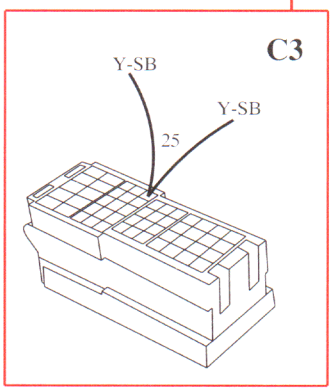
C3
Y-SB
Y-SB
25

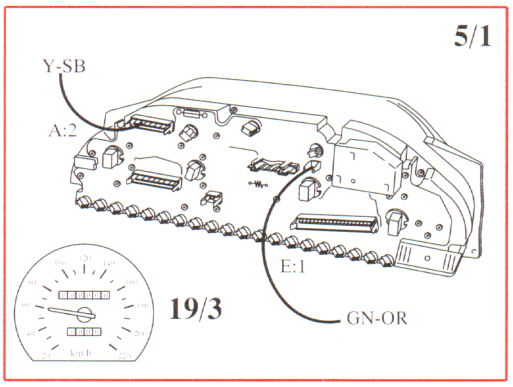
5/1
Y-SB
A:2
E:1
19/3
GN-OR

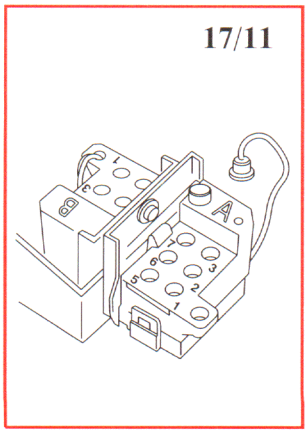
17/11
B
A

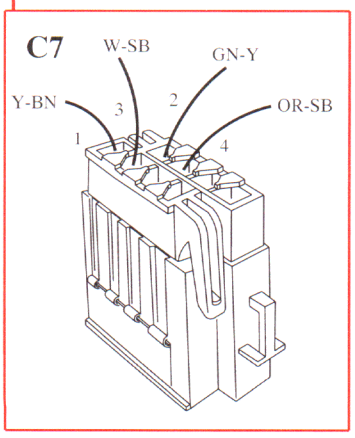
C7
W-SB
GN-Y
Y-BN
3
2
OR-SB
1
4

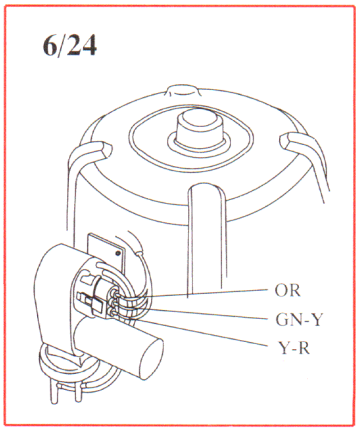
6/24
OR
GN-Y
Y-R

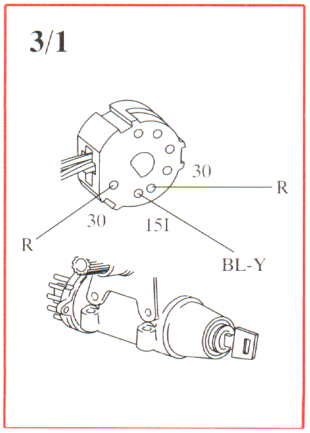
3/1
30
R
30
151
R
BL-Y