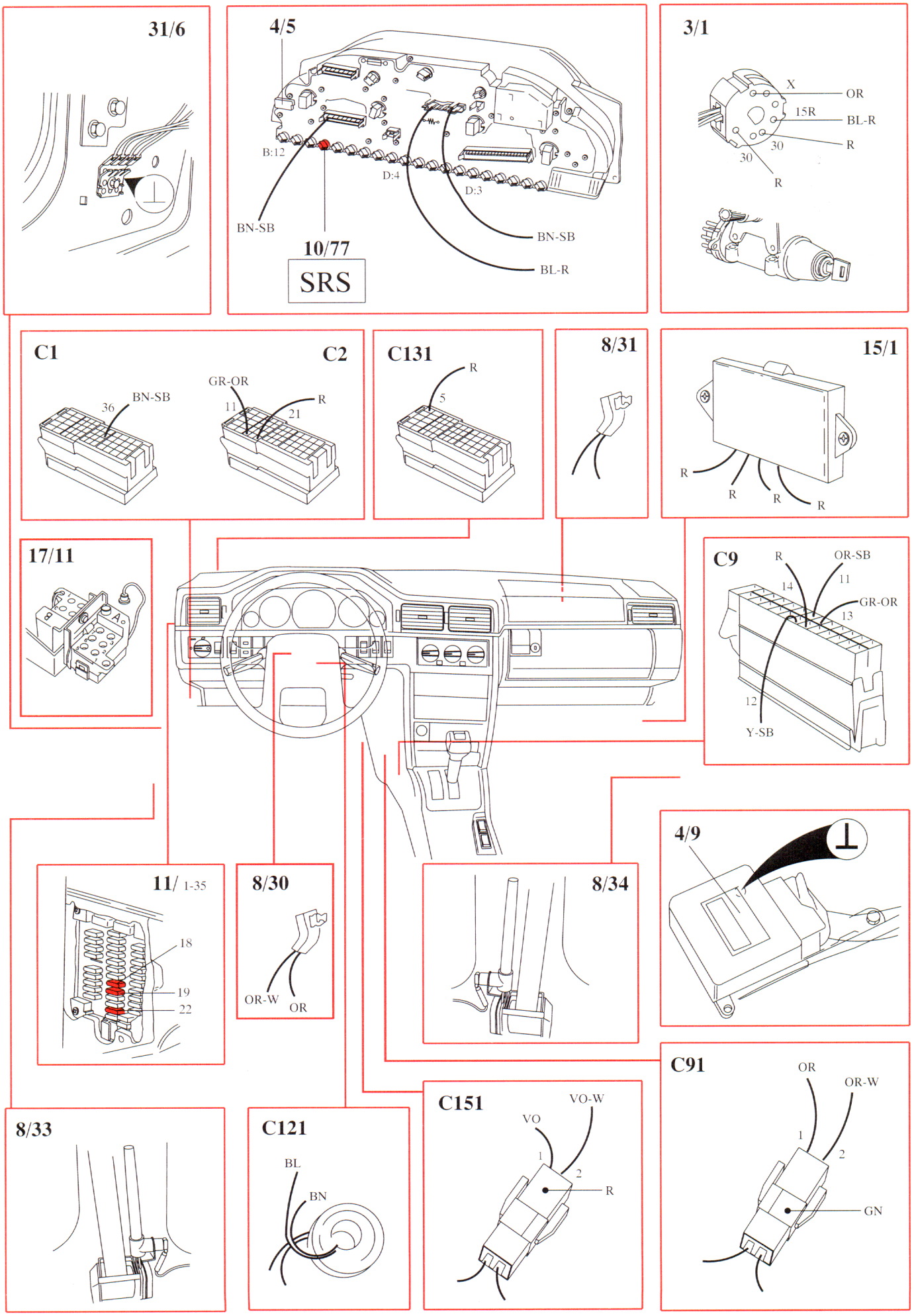
31/6
4/5
B:12
D:4
D:3
BN-SB
BN-SB
BL-R
10/77
SRS
3/1
X
OR
15R
BL-R
30
R
30
R
C1
36
BN-SB
C2
GR-OR
11
21
R
C131
5
R
8/31
15/1
R
R
R
R
17/11
C9
R
OR-SB
14
11
GR-OR
13
12
Y-SB
4/9
11/ 1-35
18
19
22
8/30
OR-W
OR
8/34
C91
OR
OR-W
1
2
GN
8/33
C121
BL
BN
C151
VO-W
VO
1
2
R