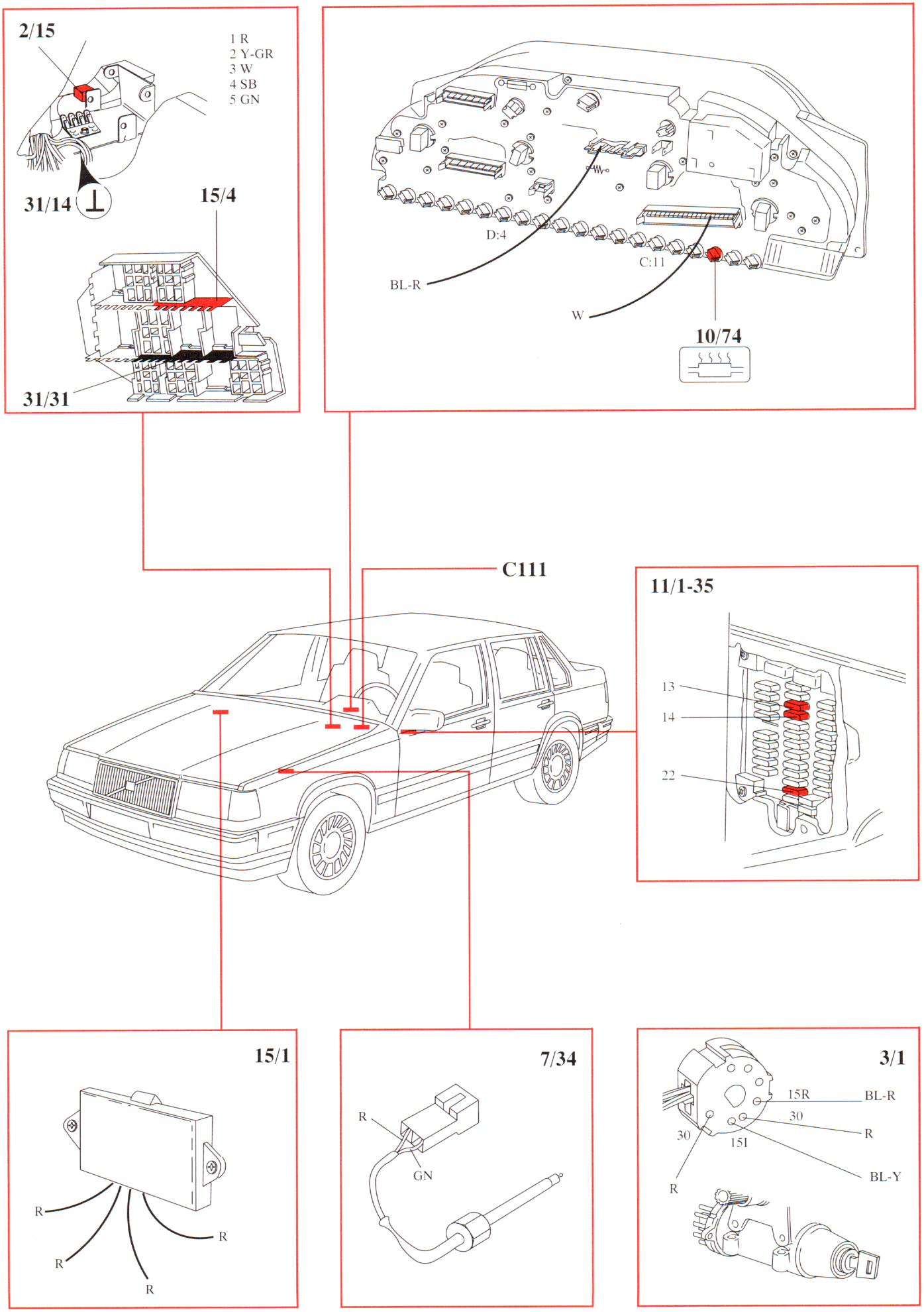
2/15
1 R
2 Y-GR
3 W
4 SB
5 GN
31/14
15/4
31/31
D:4
C:11
BL-R
W
10/74
C111
11/1-35
13
14
22
15/1
R
R
R
R
7/34
R
GN
3/1
15R
BL-R
30
R
30
15I
BL-Y
R