# AW71 Overdrive with kickdown inhibitor

Overdrive engaged.
Indicator lamp OFF.

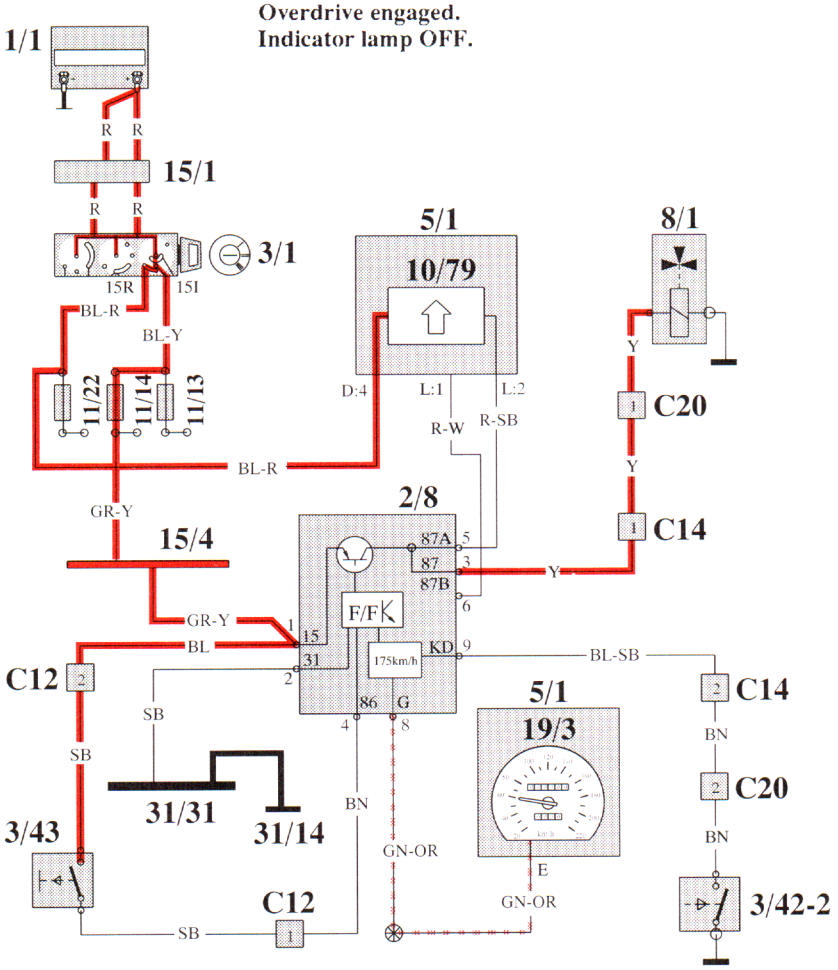


Overdrive disengaged
Indicator lamp ON.

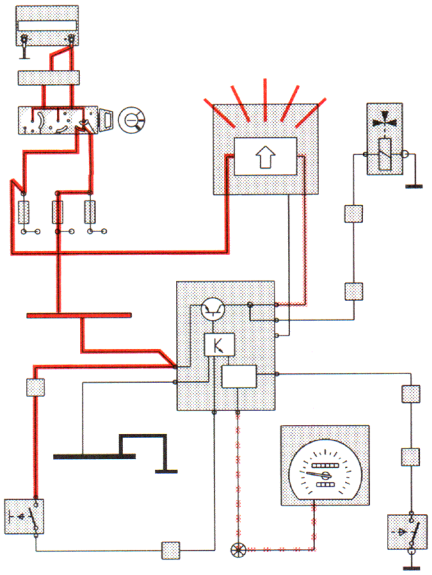

Overdrive engaged.
Accelerator pedal pressed down.
Downshift occurs.

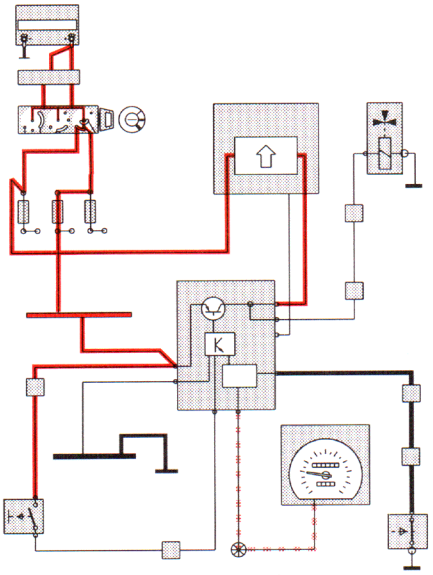
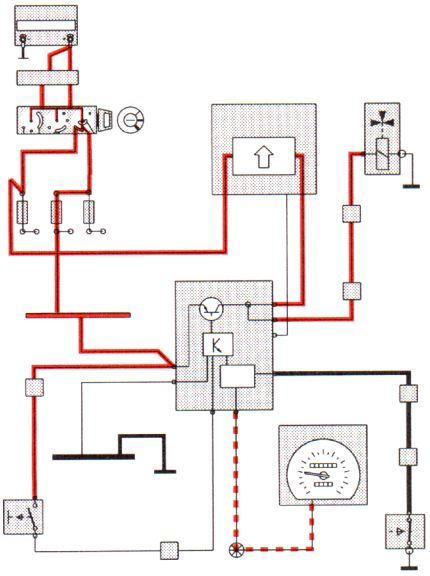
Overdrive engaged.
Accelerator pedal pressed down.
Speed too high for downshift.