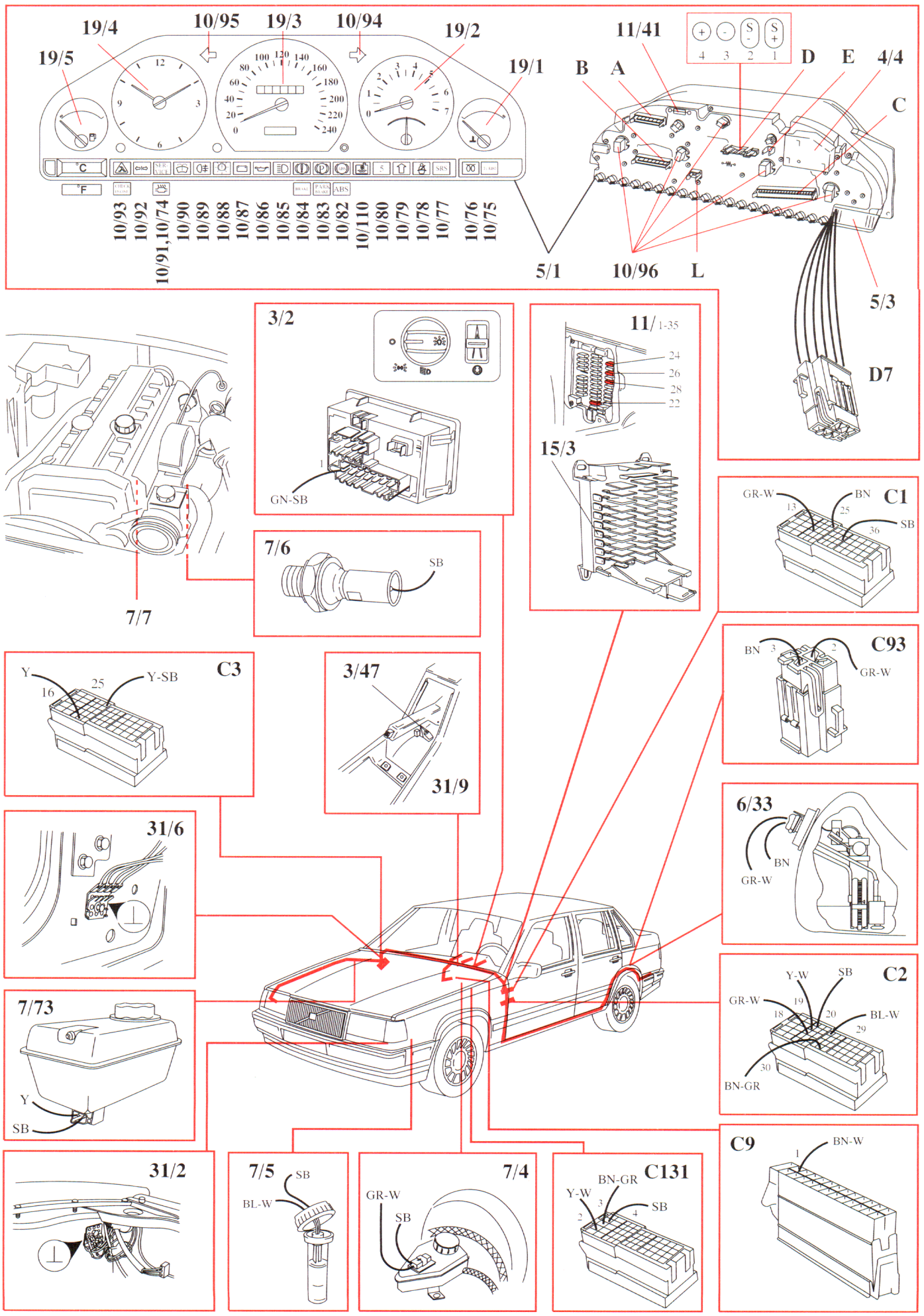
19/4
10/95
19/3
10/94
19/2
19/5
19/1
11/41
B
A
D
E
4/4
C
5/1
10/96
L
5/3
D7
10/93
10/92
10/91,10/74
10/90
10/89
10/88
10/87
10/86
10/85
10/84
10/83
10/82
10/110
10/80
10/79
10/78
10/77
10/76
10/75
3/2
GN-SB
11/1-35
24
26
28
22
15/3
GR-W
BN
C1
13
25
36
SB
7/6
SB
7/7
C93
BN
GR-W
C3
Y
16
25
Y-SB
3/47
31/9
6/33
BN
GR-W
31/6
7/73
Y
SB
C2
Y-W
SB
GR-W
19
18
20
BL-W
29
30
BN-GR
C9
BN-W
31/2
7/5
SB
BL-W
7/4
GR-W
SB
C131
BN-GR
Y-W
SB