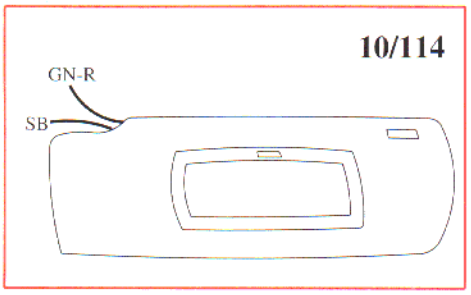
10/114
GN-R
SB

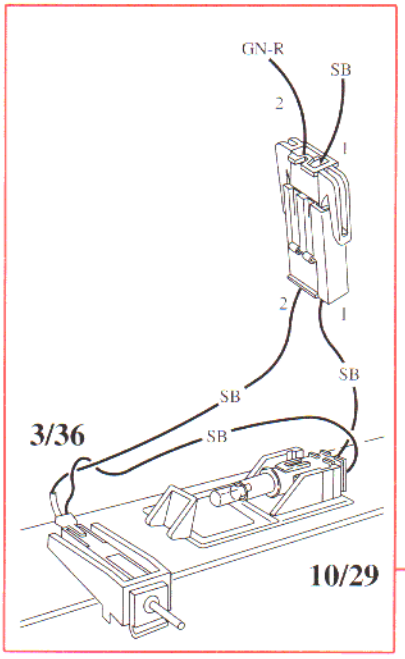
GN-R
SB
2
1
2
1
SB
SB
SB
3/36
10/29

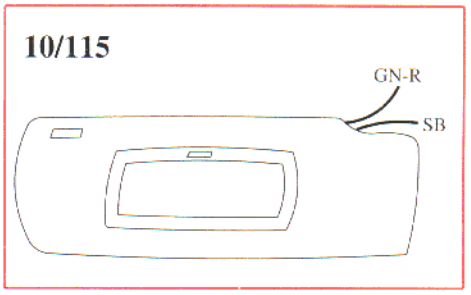
10/115
GN-R
SB

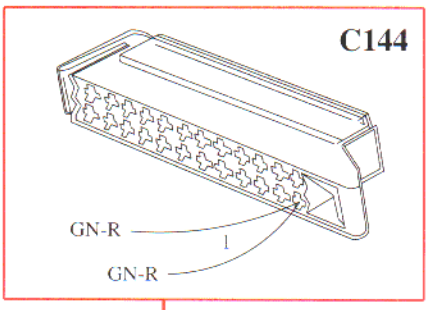
C144
GN-R
1
GN-R

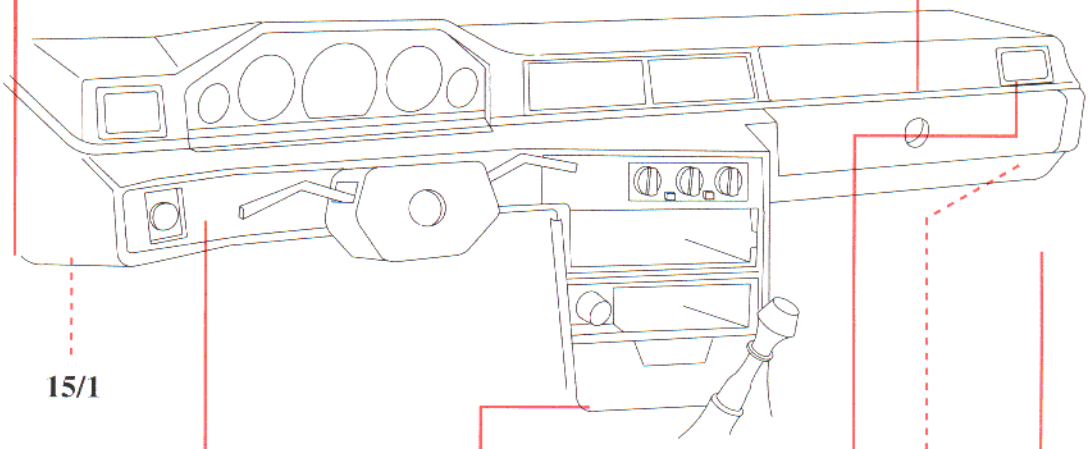
15/1

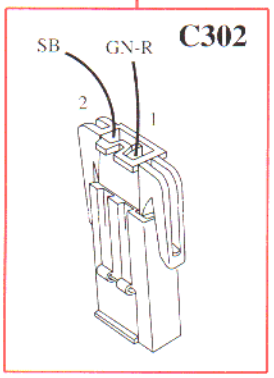
C302
SB
GN-R
2
1

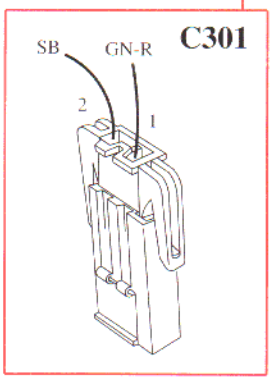
C301
SB
GN-R
2
1

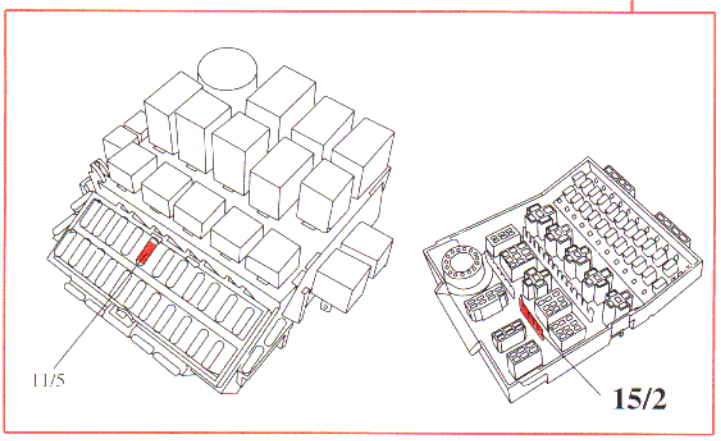
11/5
15/2

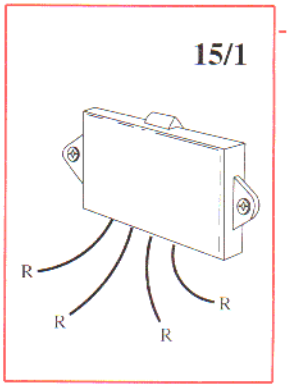
15/1
R
R
R
R

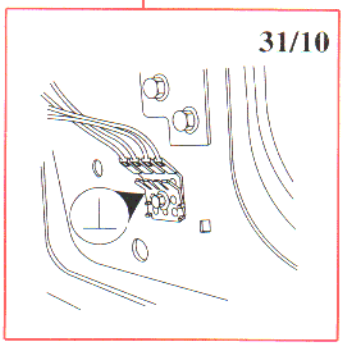
31/10