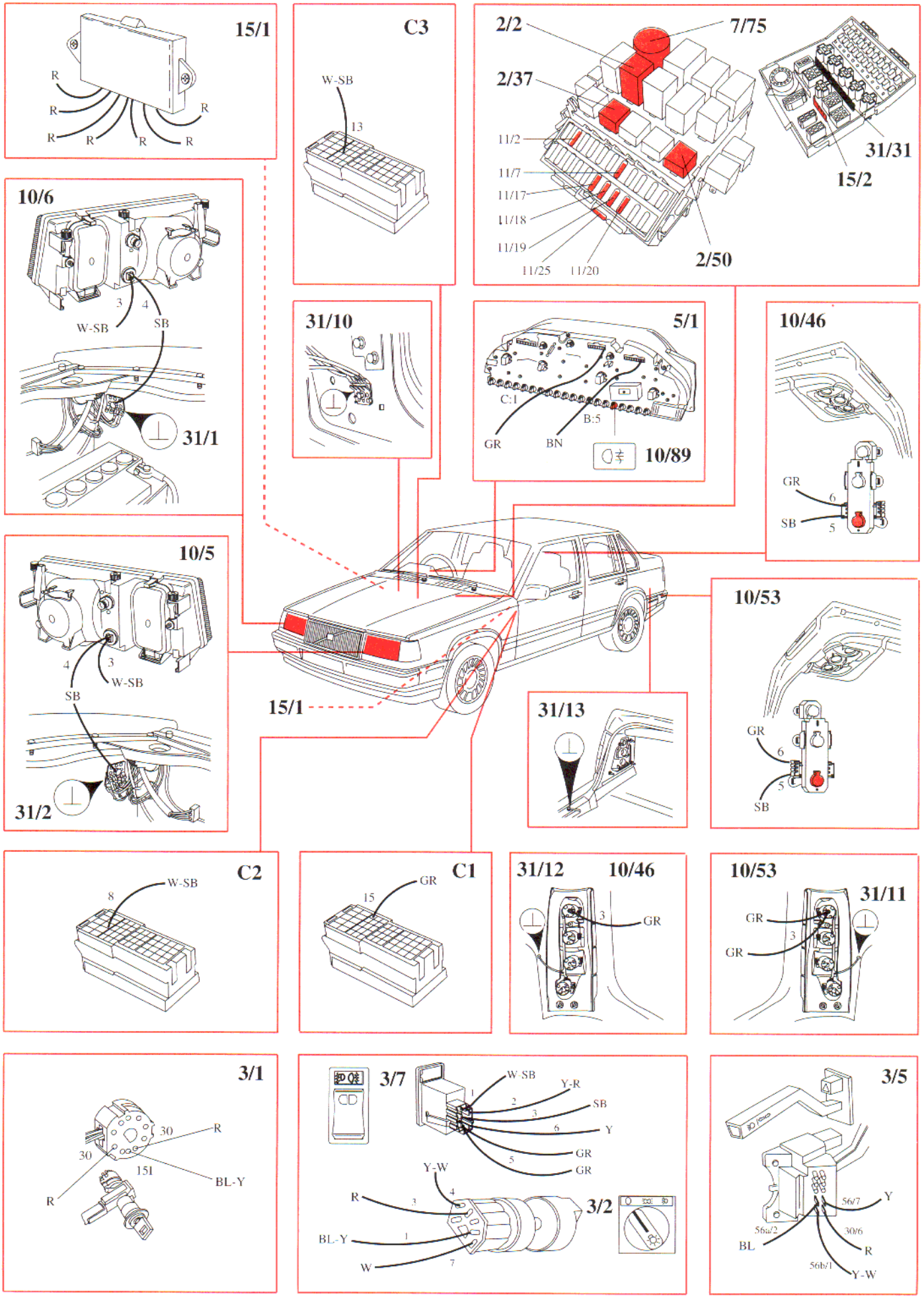
15/1
R
R
R
R
R
R
R
C3
W-SB
13
2/2
7/75
2/37
11/2
11/7
11/17
11/18
11/19
11/25
11/20
2/50
31/31
15/2
10/6
3
4
W-SB
SB
31/1
31/10
5/1
C:1
B:5
GR
BN
10/89
10/46
GR
6
SB
5
10/5
4
3
W-SB
SB
31/2
15/1
31/13
10/53
GR
6
5
SB
C2
8
W-SB
C1
15
GR
31/12
10/46
3
GR
10/53
31/11
GR
3
GR
3/1
30
R
30
151
BL-Y
R
3/7
W-SB
Y-R
SB
Y
GR
GR
Y-W
R
3
4
3/2
BL-Y
1
W
7
3/5
56/7
Y
56a/2
30/6
BL
R
56b/1
Y-W