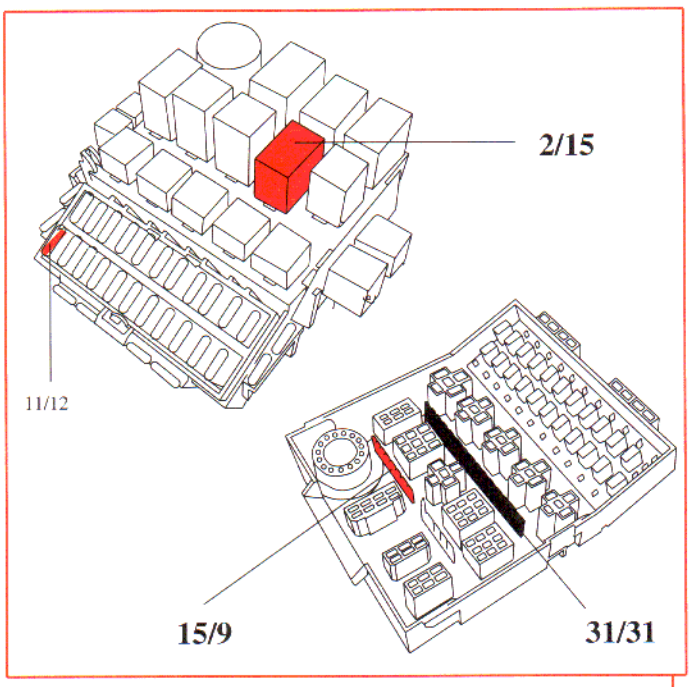
2/15
11/12
15/9
31/31

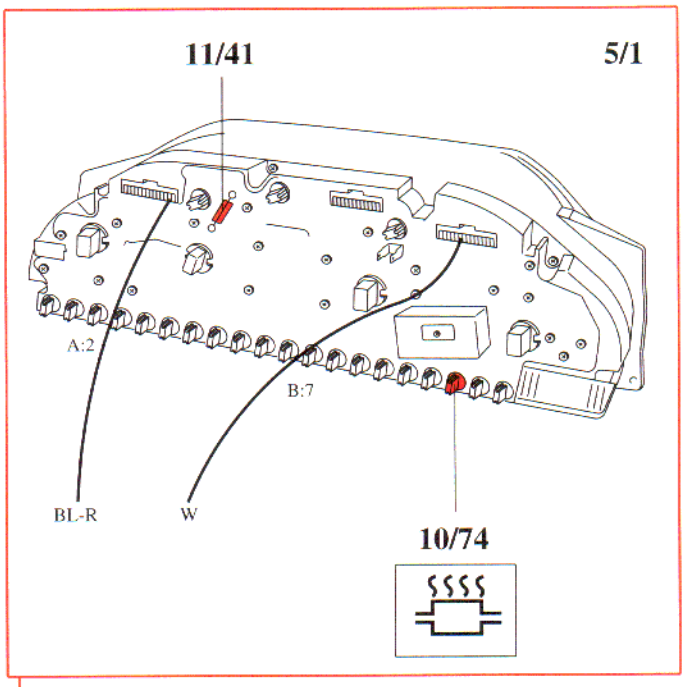
11/41
5/1
A:2
B:7
BL-R
W
10/74

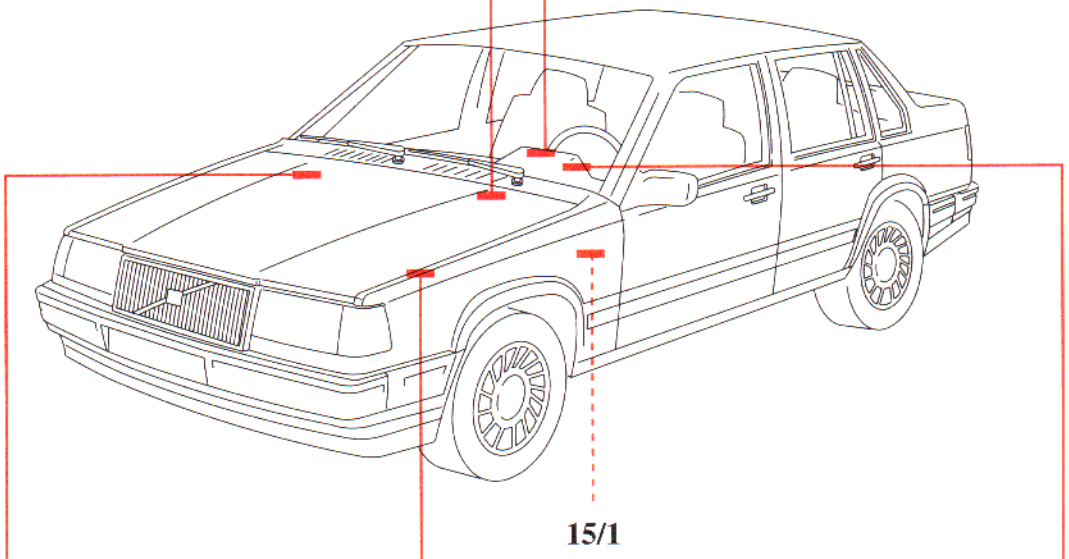
15/1

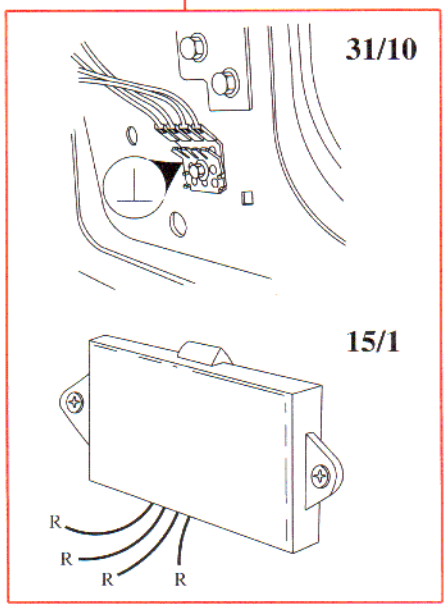
31/10
15/1
R
R
R
R

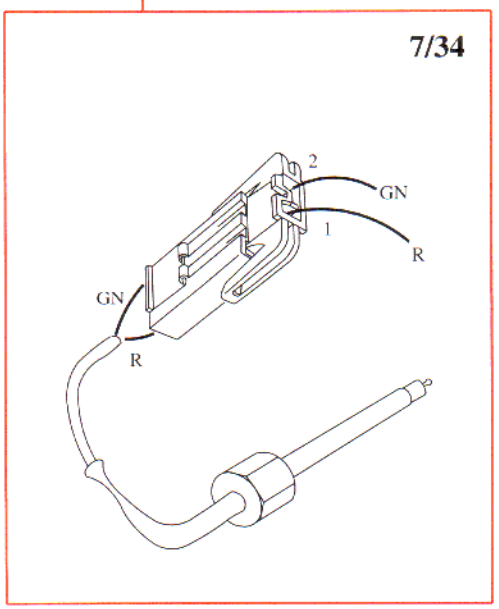
7/34
2
GN
1
R
GN
R

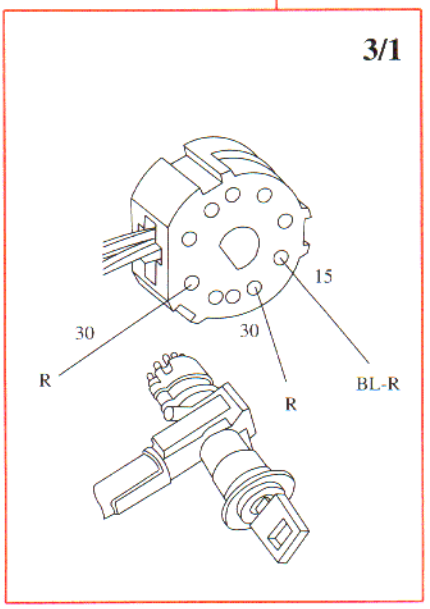
3/1
15
30
30
R
R
BL-R