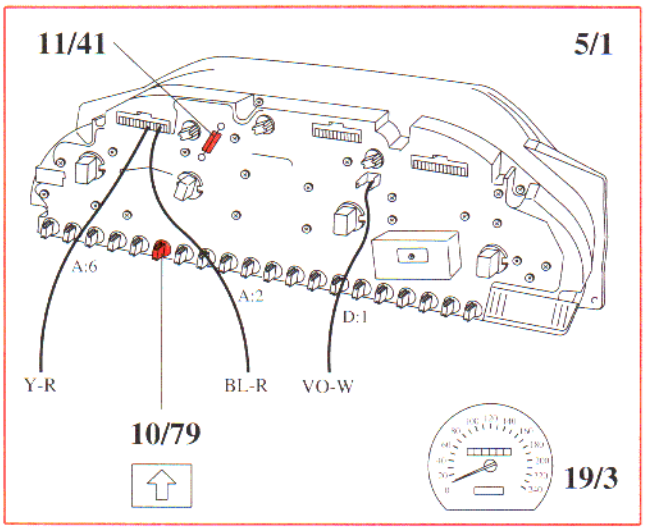
11/41
5/1
A:6
A:2
D:1
Y-R
BL-R
VO-W
10/79
19/3

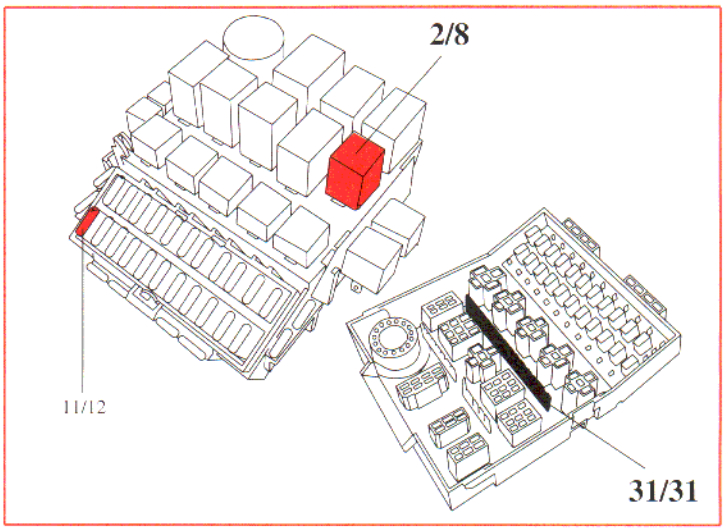
2/8
11/12
31/31

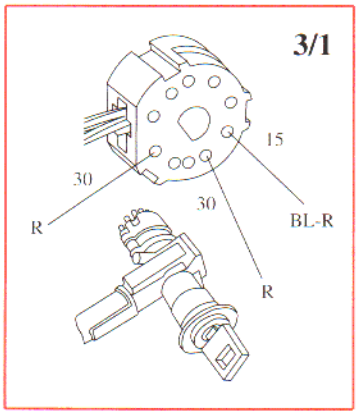
3/1
15
30
30
R
BL-R
R

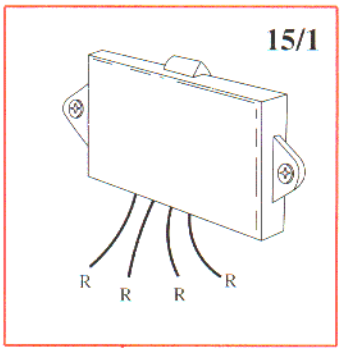
15/1
R
R
R
R

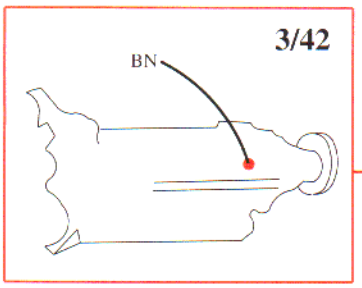
3/42
BN

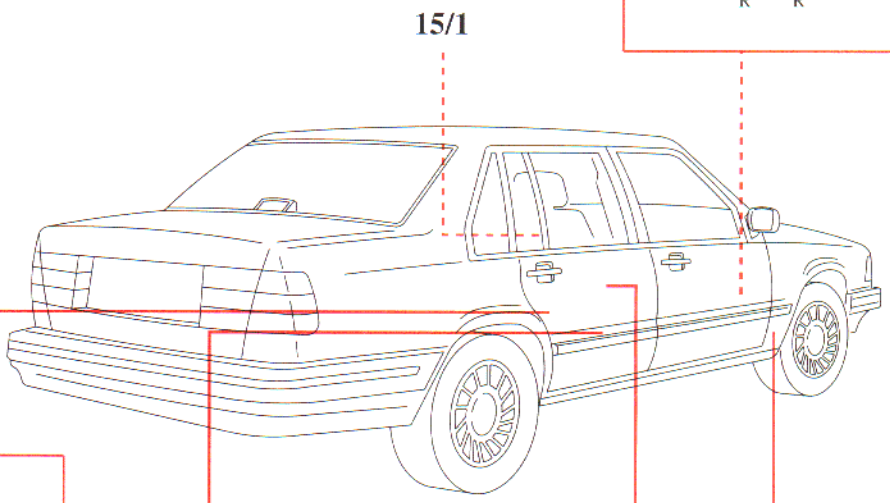
15/1

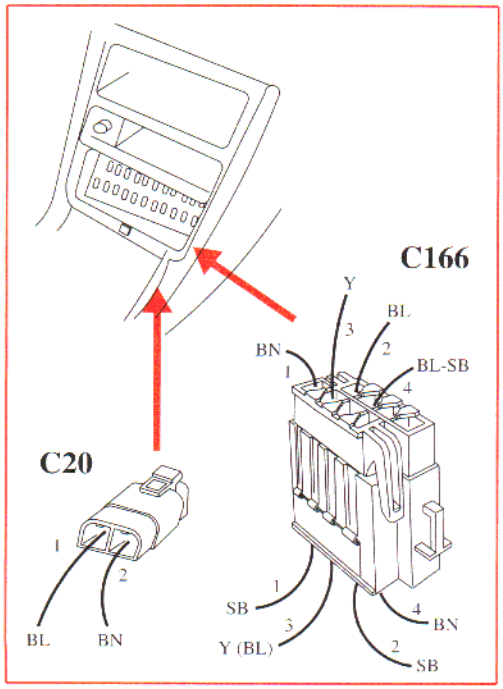
C166
Y
BL
BN
BL-SB
1
2
3
4
C20
1
2
BL
BN
SB
Y (BL)
BN
SB

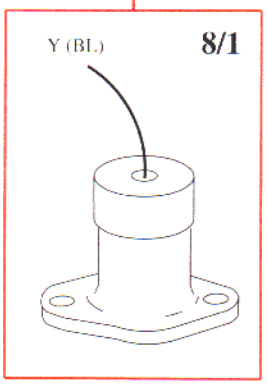
Y (BL)
8/1

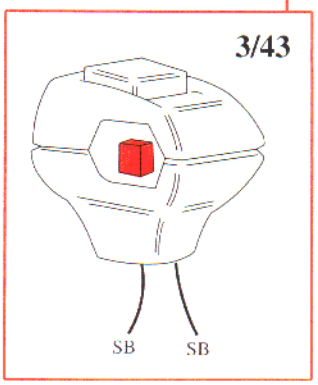
3/43
SB
SB

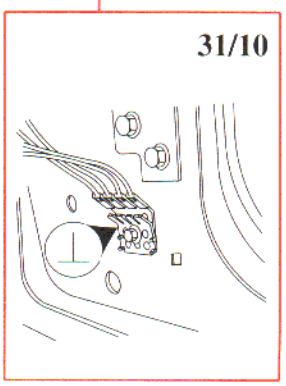
31/10