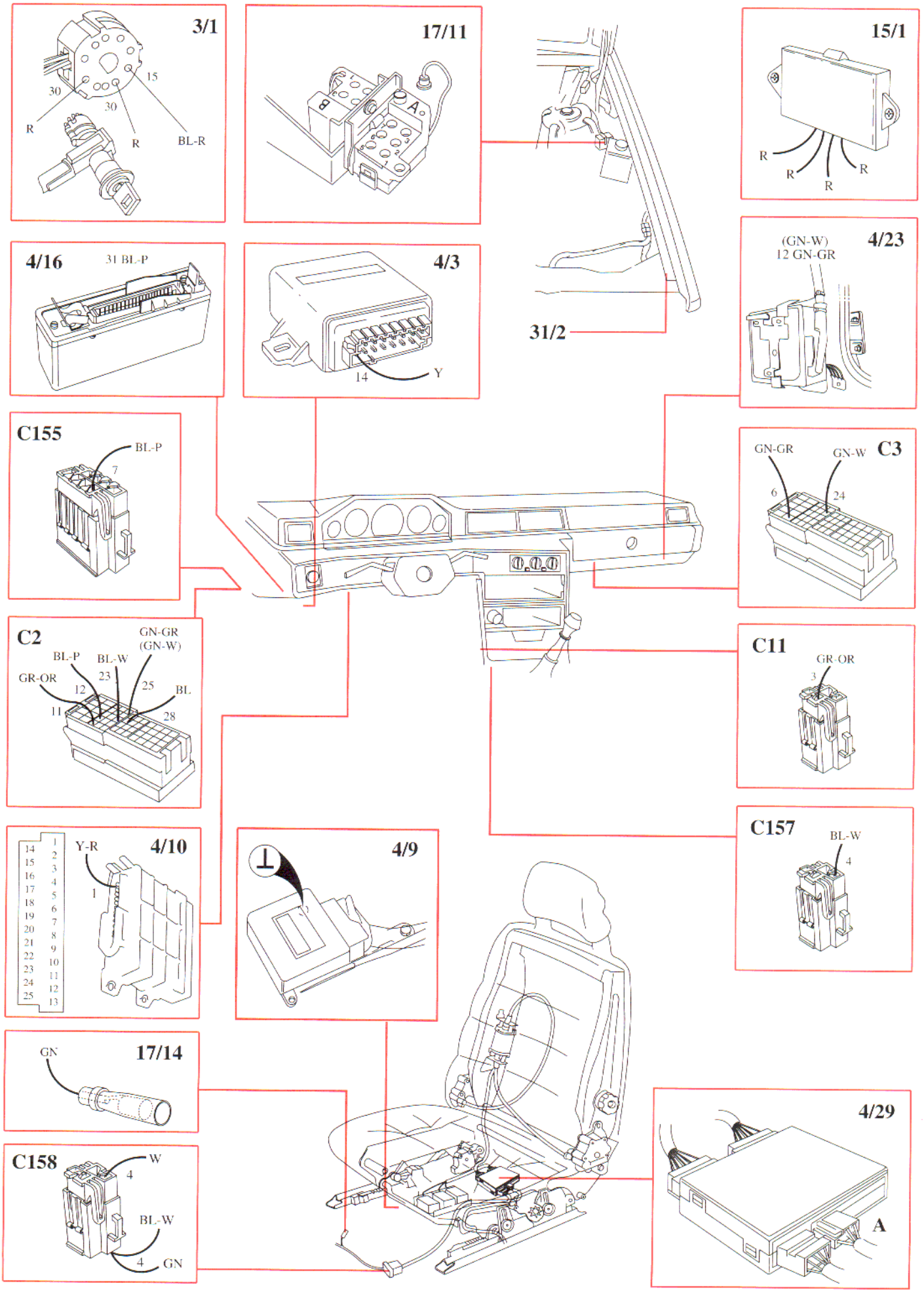
3/1
30
15
30
R
R
BL-R
17/11
B
A
15/1
R
R
R
R
4/16
31 BL-P
4/3
14
Y
31/2
4/23
(GN-W)
12 GN-GR
C155
BL-P
7
C3
GN-GR
GN-W
6
24
C2
GN-GR
(GN-W)
BL-P
BL-W
GR-OR
23
12
25
BL
11
28
C11
GR-OR
3
C157
BL-W
4
14
15
16
17
18
19
20
21
22
23
24
25
1
2
3
4
5
6
7
8
9
10
11
12
13
Y-R
4/10
1
4/9
17/14
GN
C158
W
4
BL-W
4
GN
4/29
A