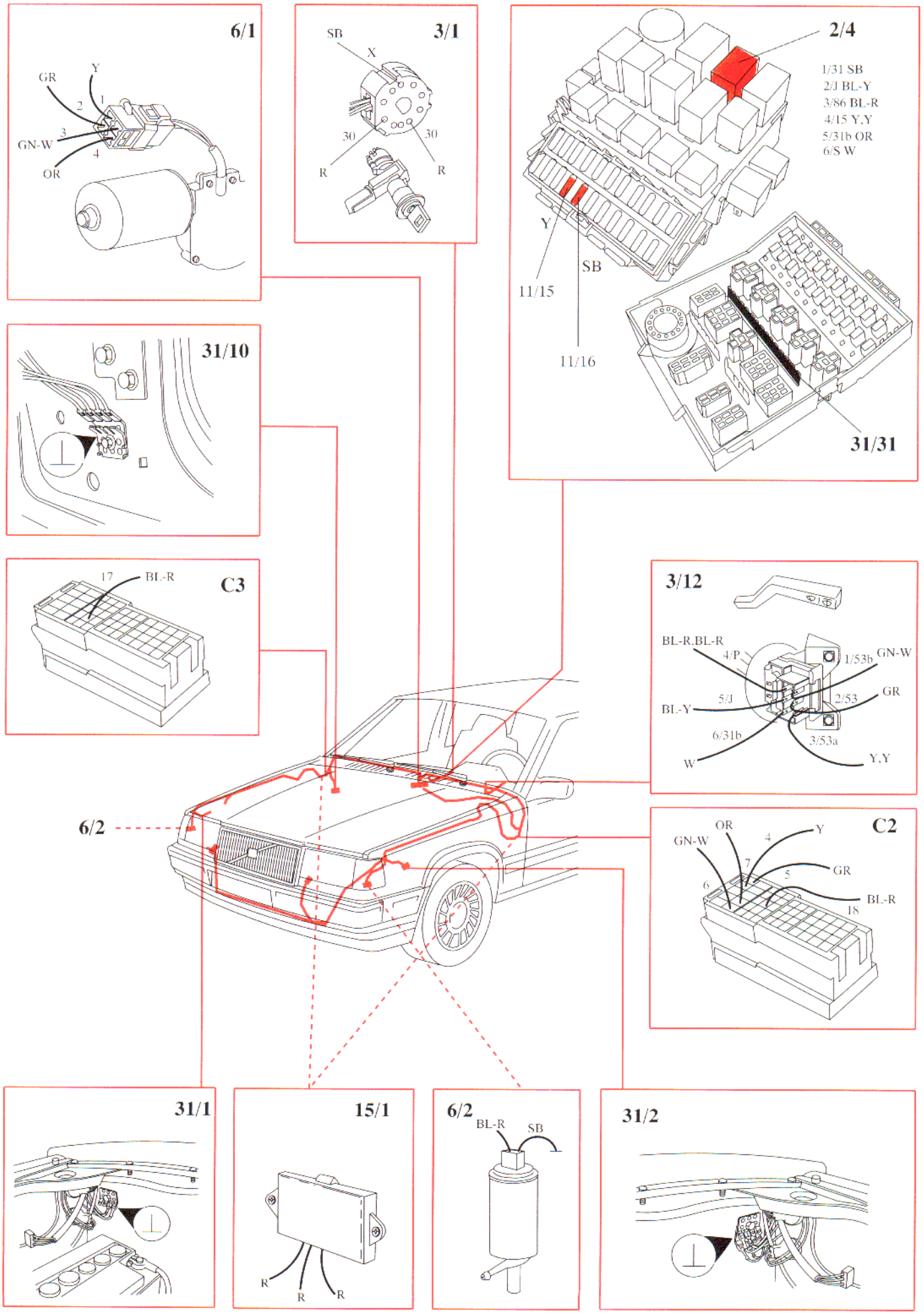
6/1
GR
Y
2
1
3
GN-W
4
OR
3/1
SB
X
30
30
R
R
2/4
1/31 SB
2/J BL-Y
3/86 BL-R
4/15 Y,Y
5/31b OR
6/S W
Y
SB
11/15
11/16
31/31
31/10
C3
17
BL-R
3/12
BL-R,BL-R
4/P
1/53b
GN-W
5/J
2/53
GR
BL-Y
6/31b
3/53a
W
Y,Y
6/2
C2
OR
GN-W
4
Y
7
5
GR
6
BL-R
18
31/1
15/1
R
R
R
6/2
BL-R
SB
31/2