Headlight wash/wipe

Wiper motors in parking cycle

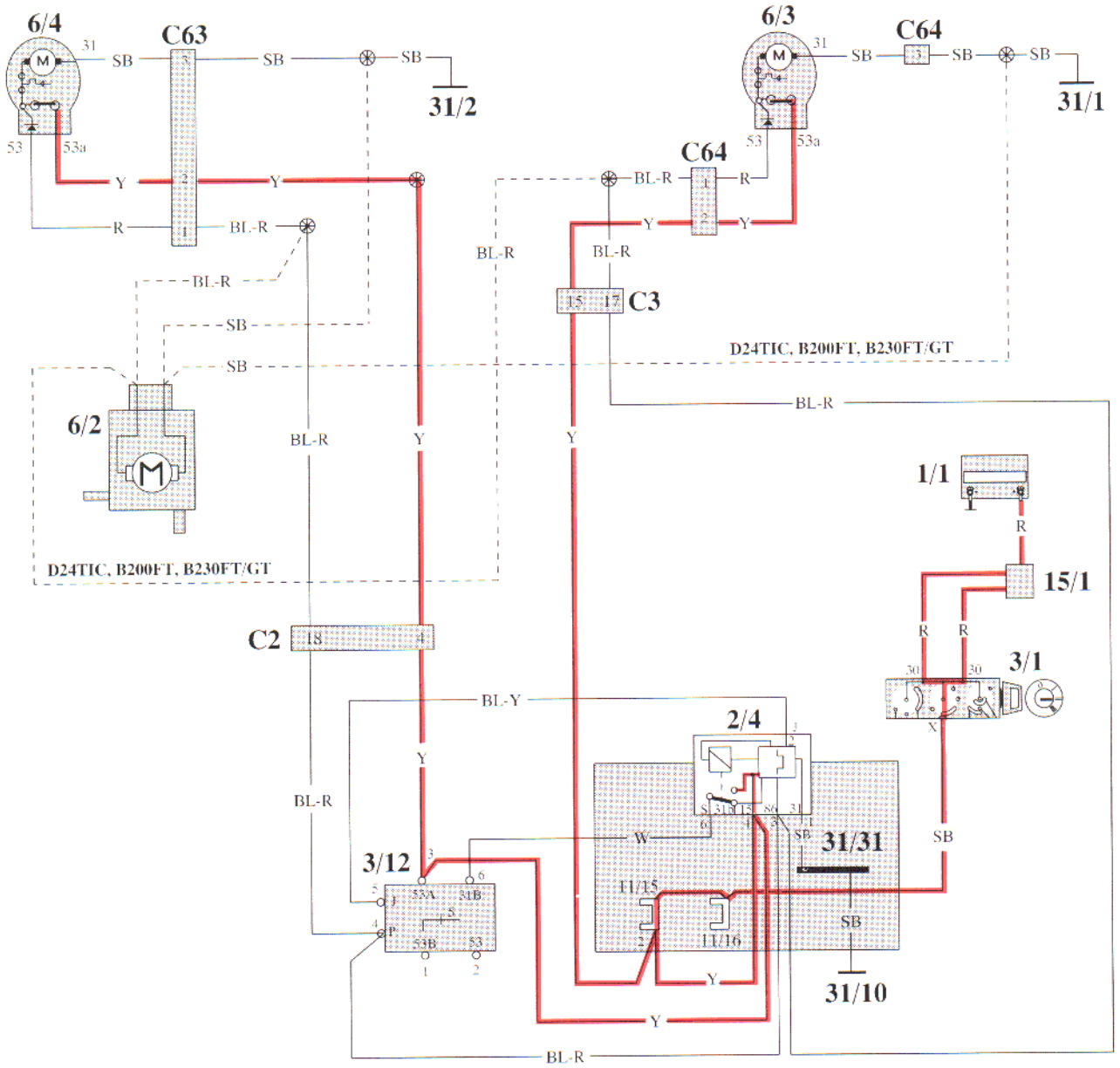

3/12

	0	1	2	3	4
+53a		X	X	X	X
53b			X		
J				X	
P					X
53	X	X		X	X
31b	X			X	X

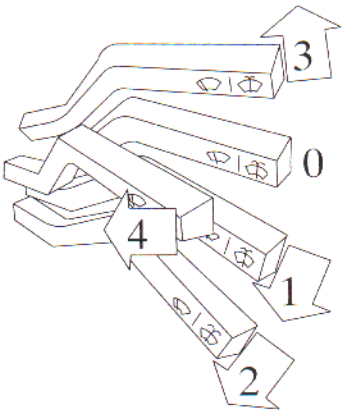

Interconnected junctions at different positions of switch 3/12