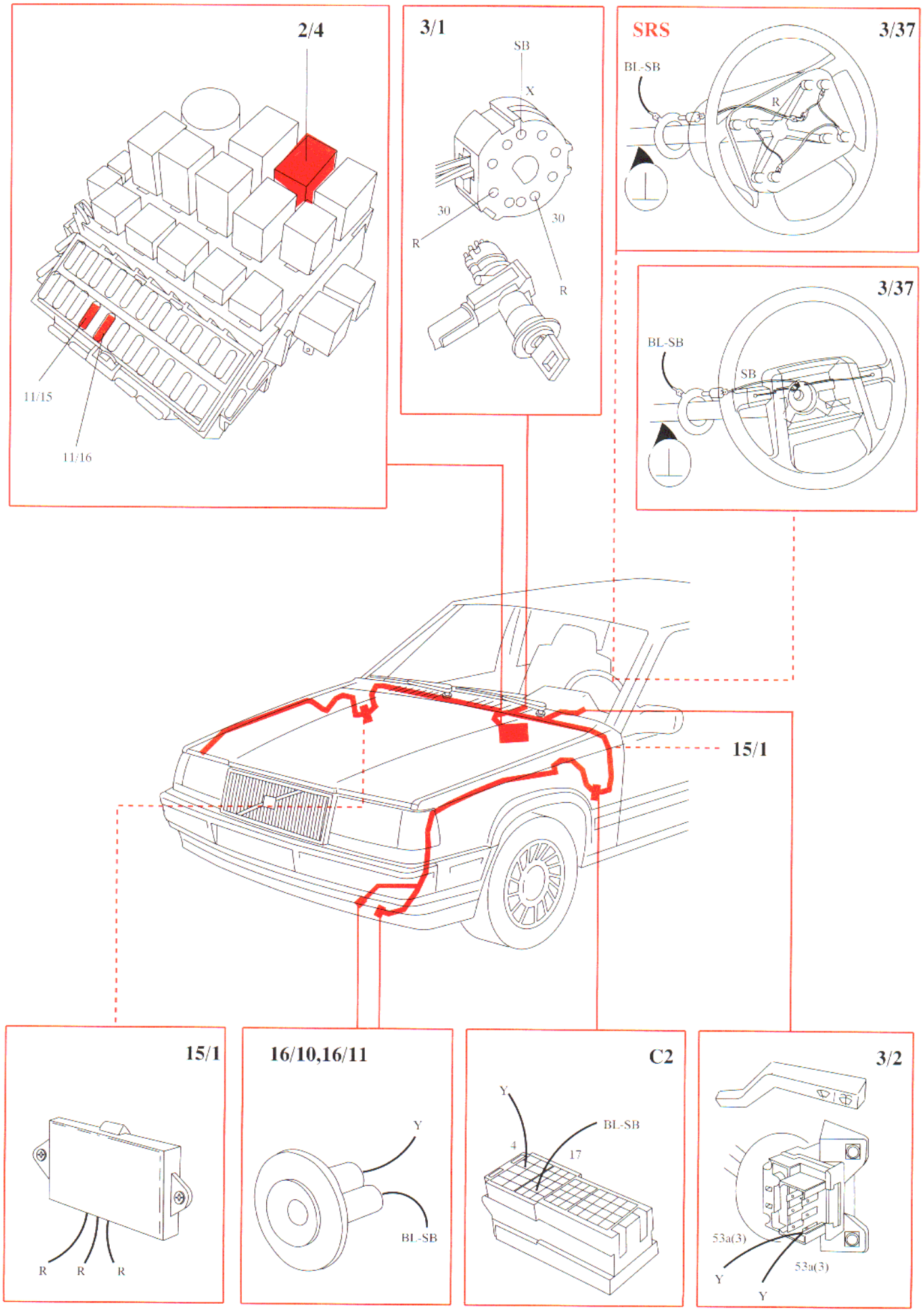
2/4
11/15
11/16
3/1
SB
X
30
R
30
R
SRS
3/37
BL-SB
R
3/37
BL-SB
SB
15/1
15/1
R
R
R
16/10,16/11
Y
BL-SB
C2
Y
4
17
BL-SB
3/2
53a(3)
Y
53a(3)
Y