Foglights, Japan, Saudi Arabia, Taiwan and Overseas
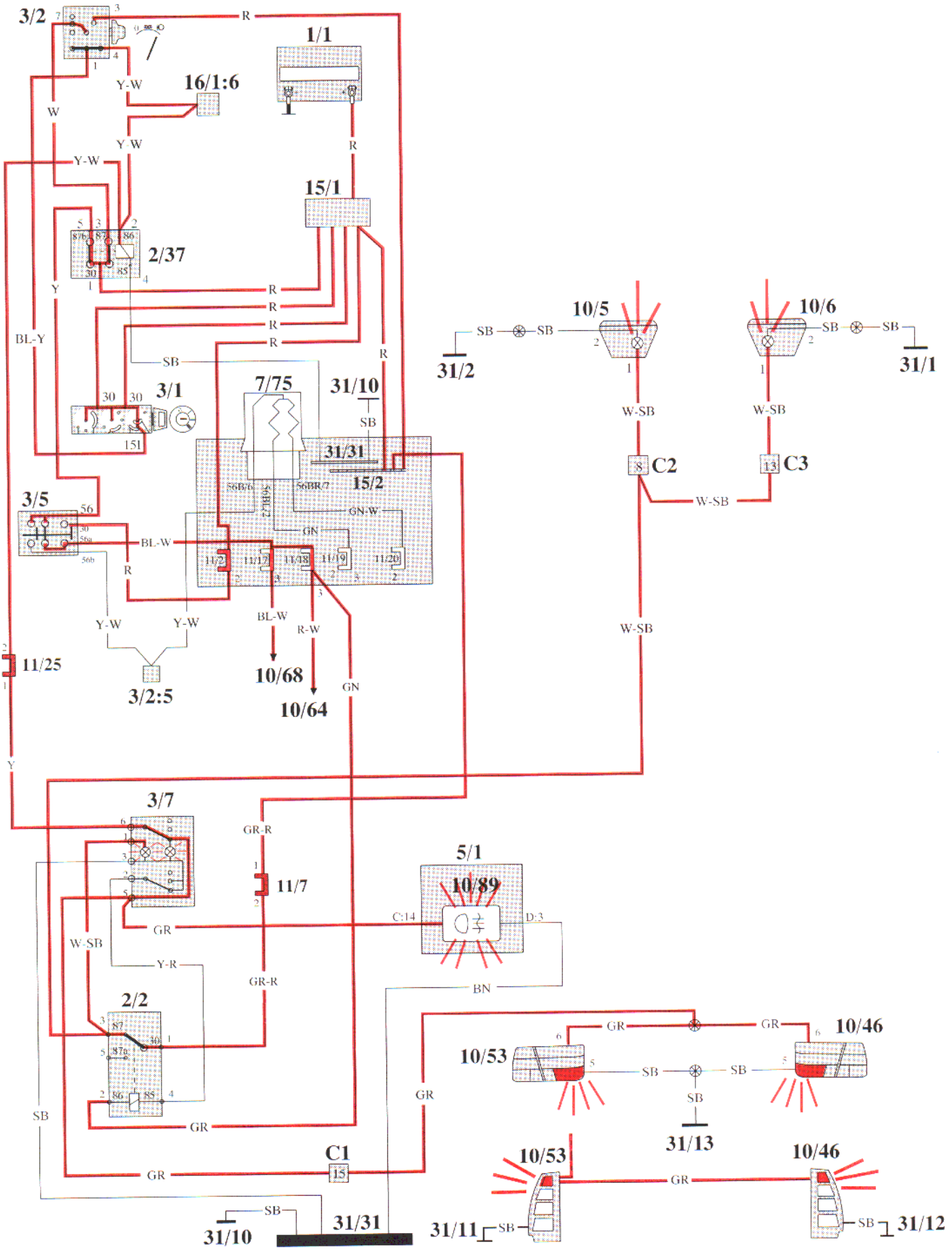
Switch 3/5 for high/low beam, in high-beam position and front foglights and rear foglights on. Both the front and rear foglights light up. (With switch 3/5 in low-beam position, only the rear foglights light up)