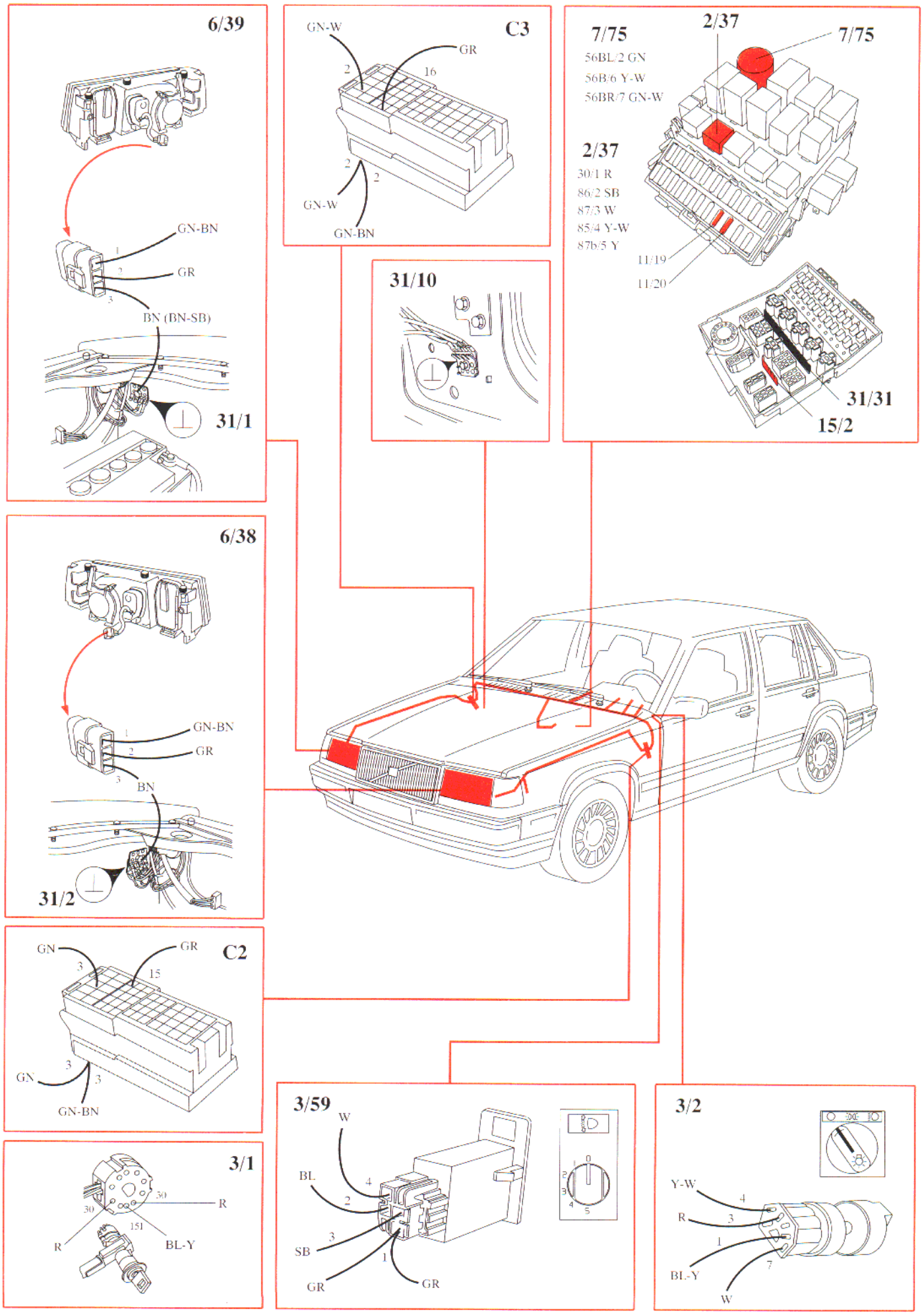
6/39
GN-BN
GR
BN (BN-SB)
31/1
C3
GN-W
GR
2
16
2
2
GN-W
GN-BN
7/75
56BL/2 GN
56B/6 Y-W
56BR/7 GN-W
2/37
7/75
2/37
30/1 R
86/2 SB
87/3 W
85/4 Y-W
87b/5 Y
11/19
11/20
31/31
15/2
31/10
6/38
GN-BN
GR
BN
31/2
C2
GN
GR
3
15
GN
3
3
GN-BN
3/59
W
BL
4
2
3
SB
1
GR
GR
0
1
2
3
4
5
3/1
30
30
R
151
R
BL-Y
3/2
Y-W
4
R
3
1
BL-Y
7
W