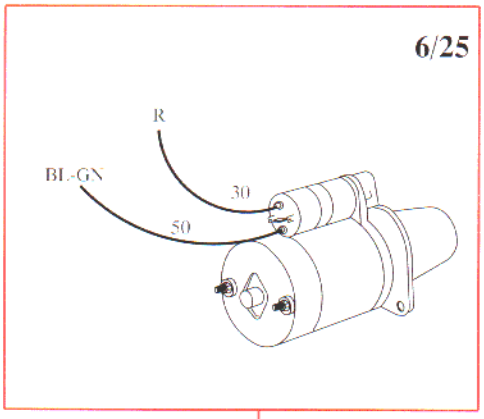
6/25
R
BL-GN
30
50

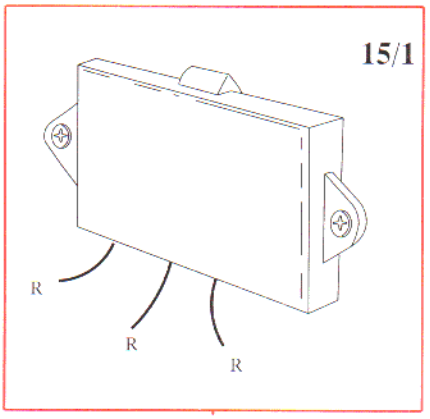
15/1
R
R
R

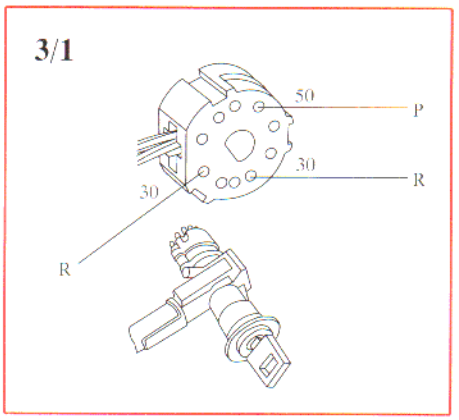
3/1
50
P
30
R
30
R

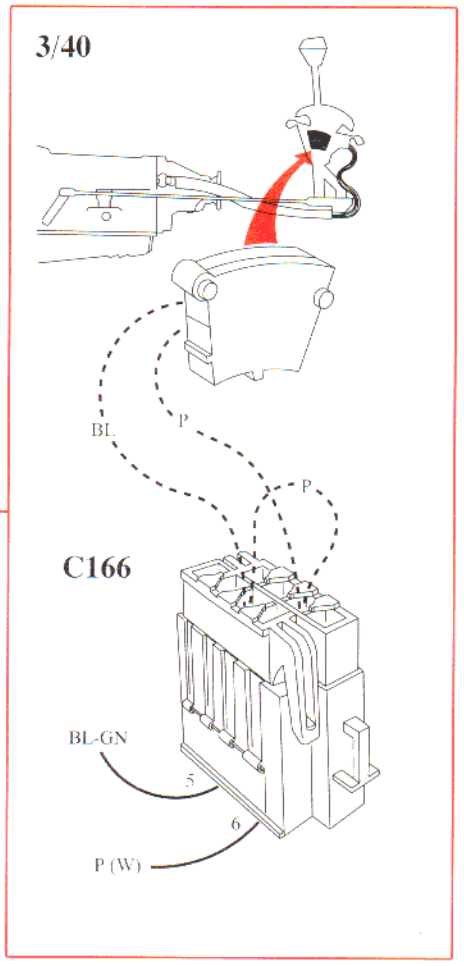
3/40
BL
P
P
C166
BL-GN
5
6
P (W)

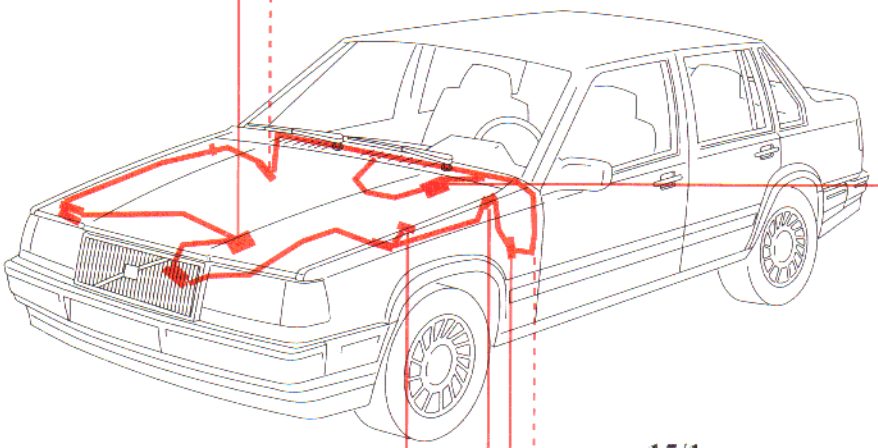
15/1

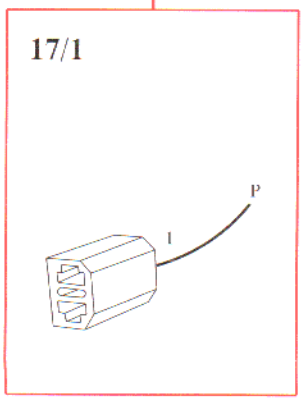
17/1
P
1

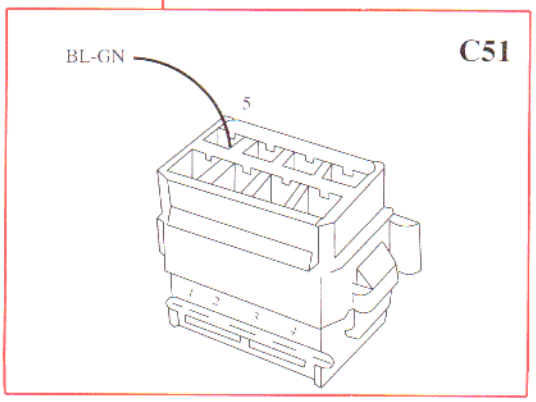
BL-GN
C51
5

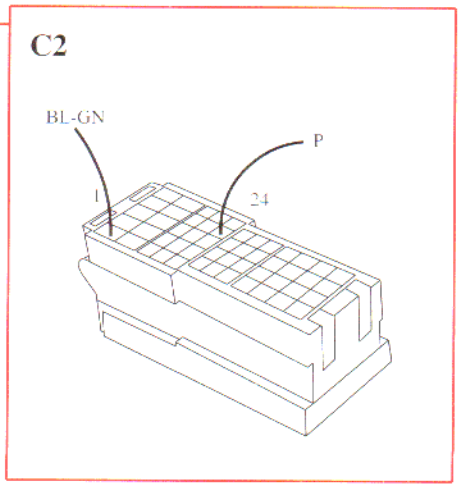
C2
BL-GN
P
1
24