Connectors C7, C9, C22

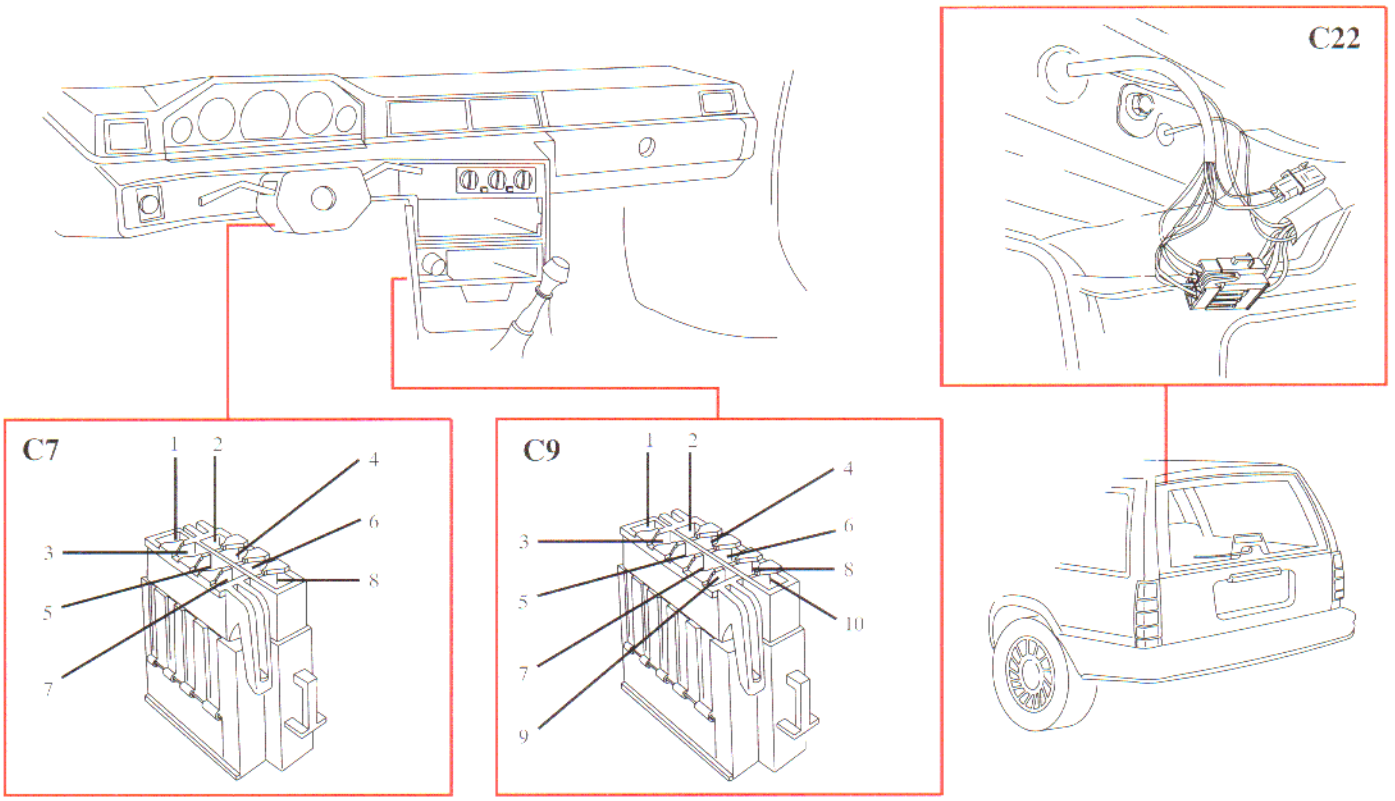

Connector **C7** (8-pin) at steering column

1	Brake light switch Relay P-shift lock, pos. 1	(Y-BN)
2	Brake light switch	(GN-Y)
3	Switch, brake pedal	(W-SB)
4	Switch, brake pedal or switch, clutch pedal	(OR-SB)
5	Relay P-shift lock, pos. 2 Bridge connector to pin 6	(P)
6	Bridge connector to pin 5	(P)
7	Relay P-shift lock, pos. 3	(BN)
8	Relay P-shift lock, pos. 4	(BN-W)

Connector **C9** (10-pin) at centre console

1	Seat belt lock, driver's seat pos. 3	(GN)
2	Parking brake switch	(BN)
3	Ashtray lighting Switch light, seat heater	(GR) (GR)
4	-	
5	-	
6	Ashtray lighting Switch lighting, seat heating	(BL)
7	-	
8	Switch, heated driver's seat	(R-SB)
9	Switch, heated passenger's seat	(R-SB)
10	Ground connection, radio pos. A12	(SB)

Connector **C22** (6-pin) at tailgate (5-door estate)

1	Heated rear window	(Y)
2	Number plate lights	(W)
3	Tailgate wiper	(OR)
4	Tailgate wiper	(Y-W)
5	Extra brake light	(Y-SB)
6	Number plate lights Tailgate wiper Heated rear window Extra brake light	(SB)