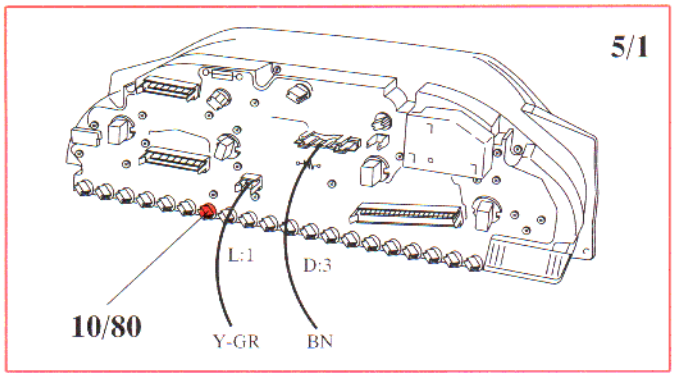
5/1
10/80
L:1
D:3
Y-GR
BN

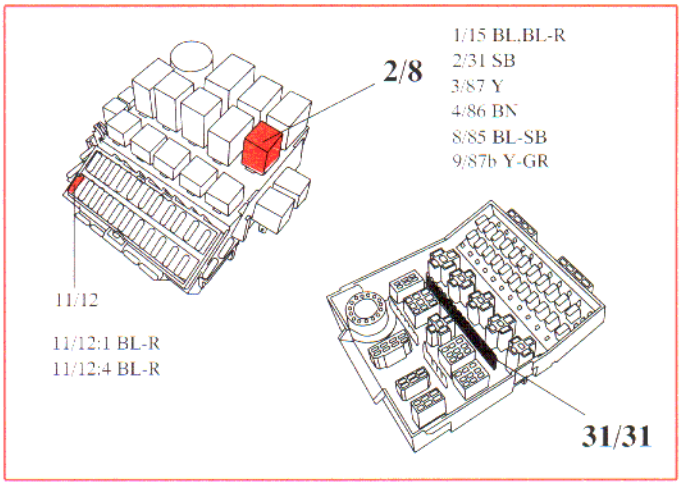
2/8
1/15 BL,BL-R
2/31 SB
3/87 Y
4/86 BN
8/85 BL-SB
9/87b Y-GR
11/12
11/12:1 BL-R
11/12:4 BL-R
31/31

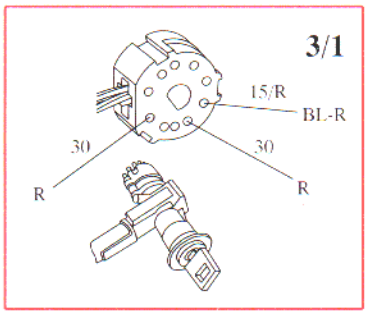
3/1
15/R
BL-R
30
30
R
R

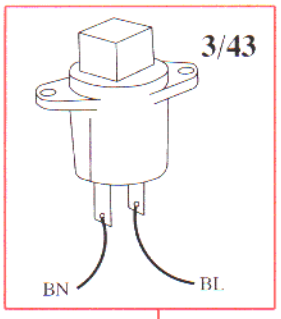
3/43
BN
BL

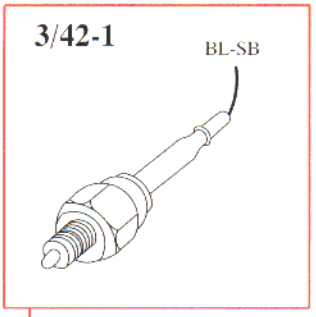
3/42-1
BL-SB

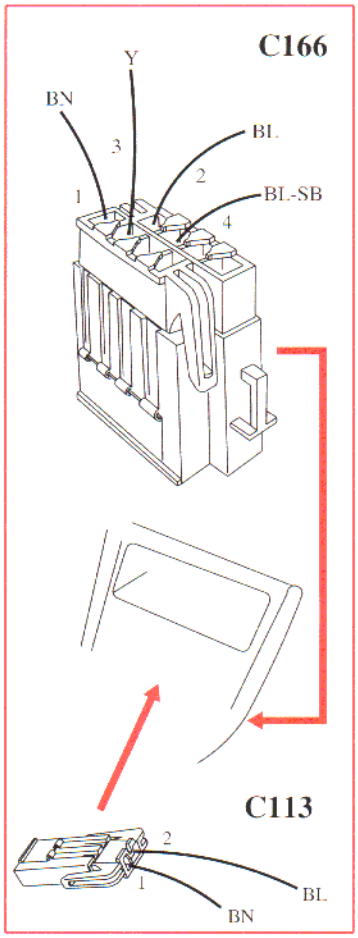
C166
Y
BN
3
BL
2
1
BL-SB
4
C113
2
1
BL
BN

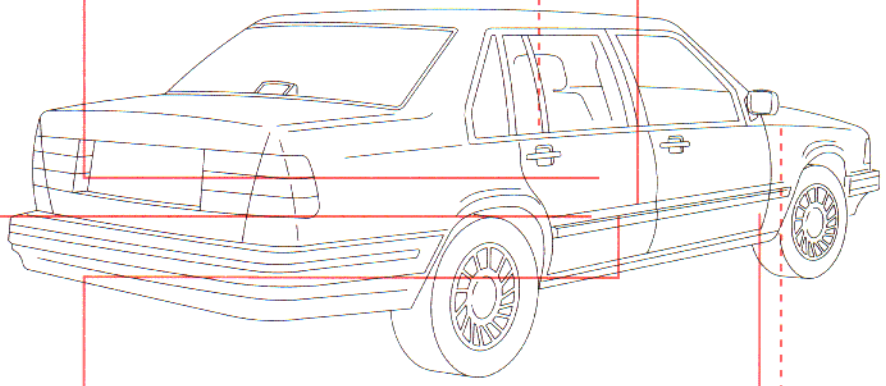
15/1

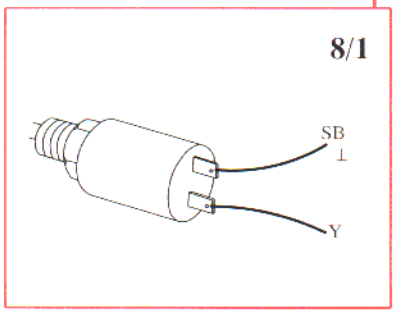
8/1
SB
Y

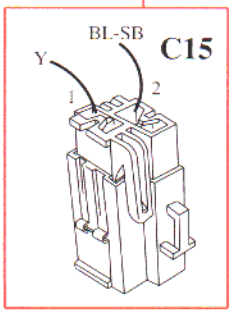
BL-SB
C15
Y
1
2

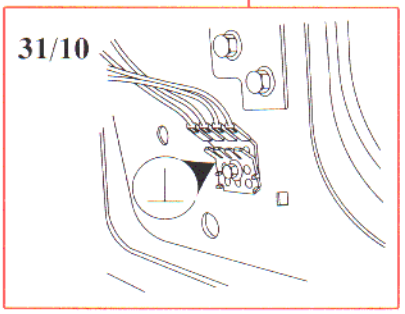
31/10

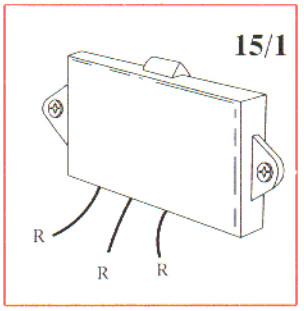
15/1
R
R
R