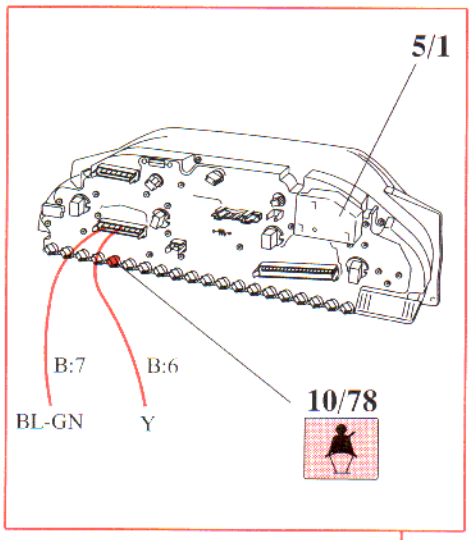
5/1
B:7
B:6
BL-GN
Y
10/78

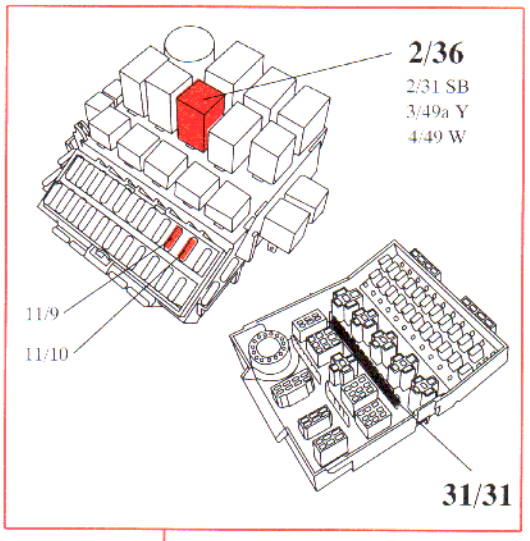
2/36
2/31 SB
3/49a Y
4/49 W
11/9
11/10
31/31

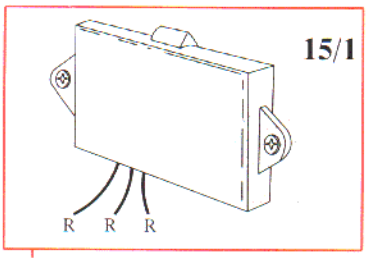
15/1
R R R

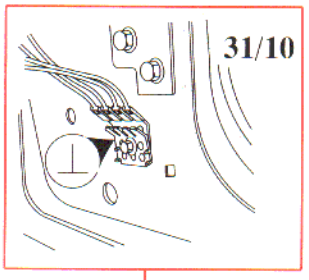
31/10

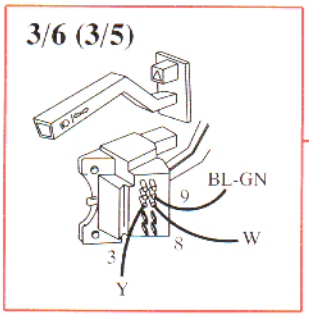
3/6 (3/5)
BL-GN
9
W
8
3
Y

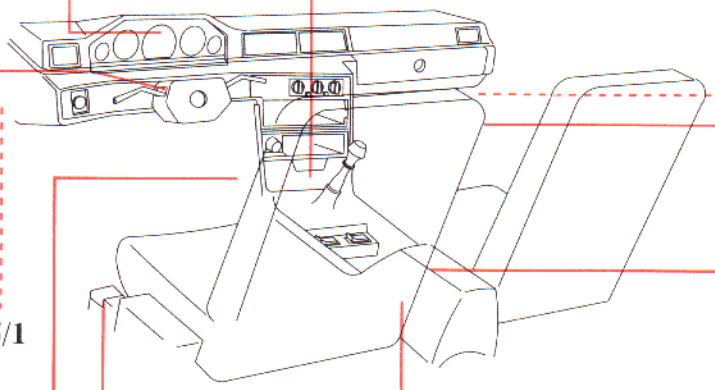
15/1

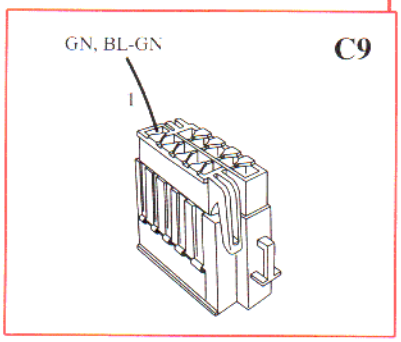
GN, BL-GN
C9
1

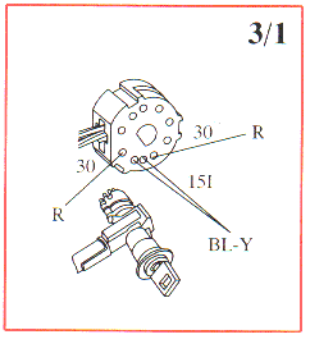
3/1
30
R
30
15I
R
BL-Y

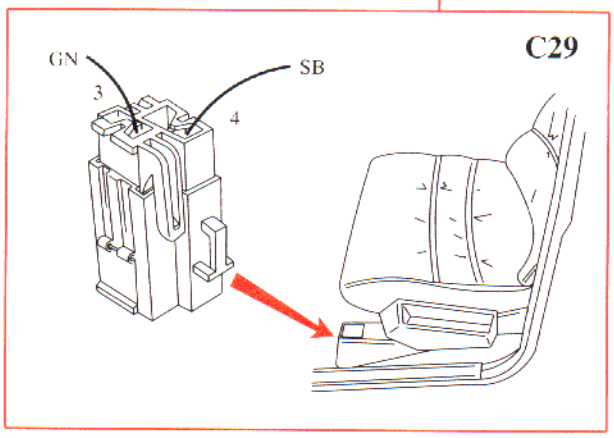
GN
SB
3
4
C29

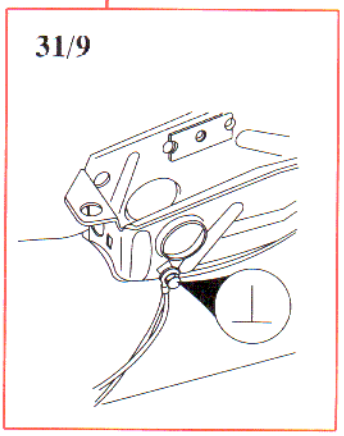
31/9

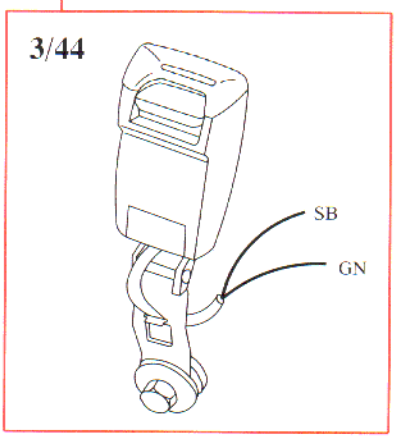
3/44
SB
GN