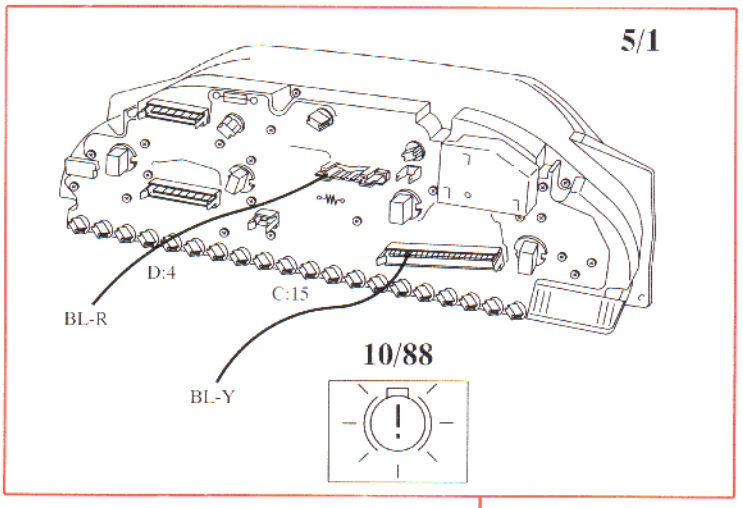
5/1
D:4
C:15
BL-R
BL-Y
10/88

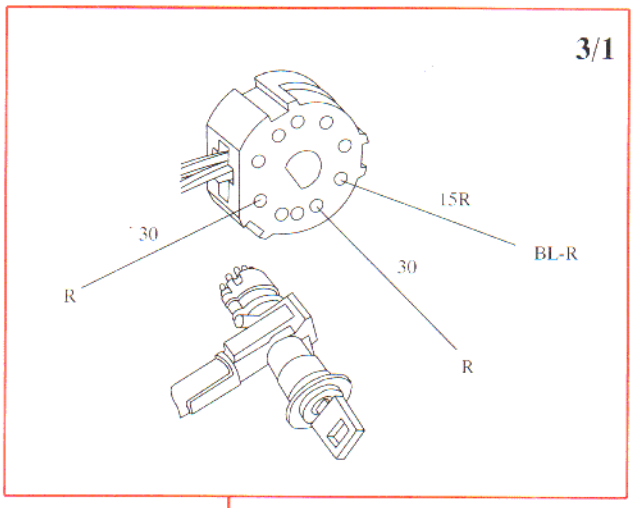
3/1
15R
BL-R
30
30
R
R

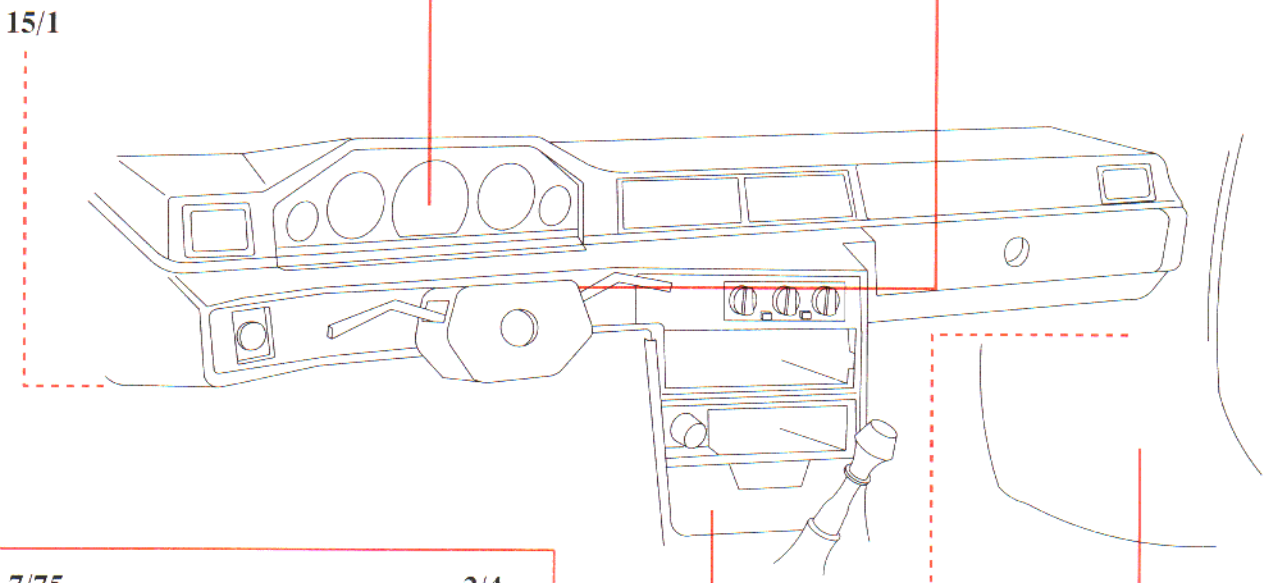
15/1

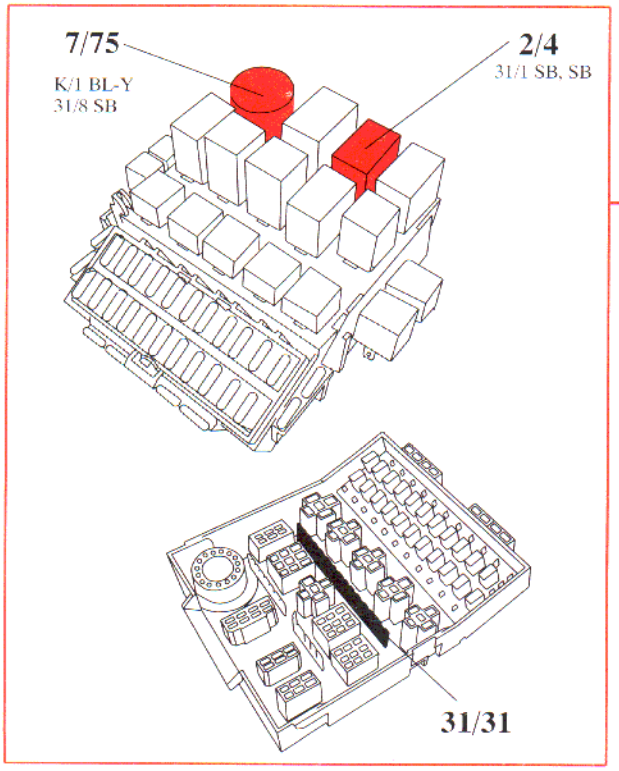
7/75
K/1 BL-Y
31/8 SB
2/4
31/1 SB, SB
31/31

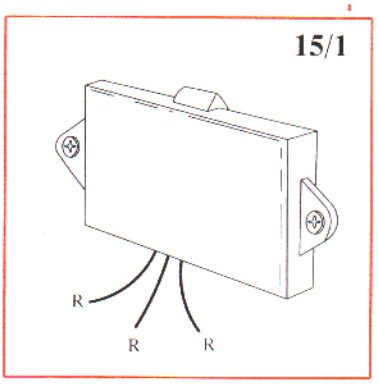
15/1
R
R
R

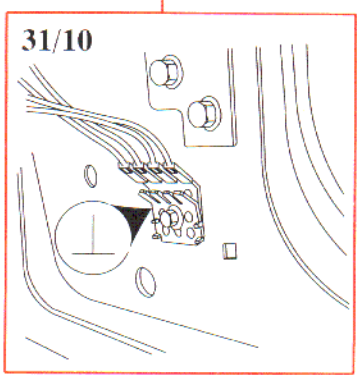
31/10